SCV VALVE
Innovative Valve Solutions®

(281) 482-4728 · www.scvvalve.com

1-Piece Flanged Floating Ball Valves - B16.34 - Reduced Port

2-Piece Flanged Floating Ball Valves - B16.34 - Full Port

Class: 150 - 1500
Sizes: 1/2” - 12”

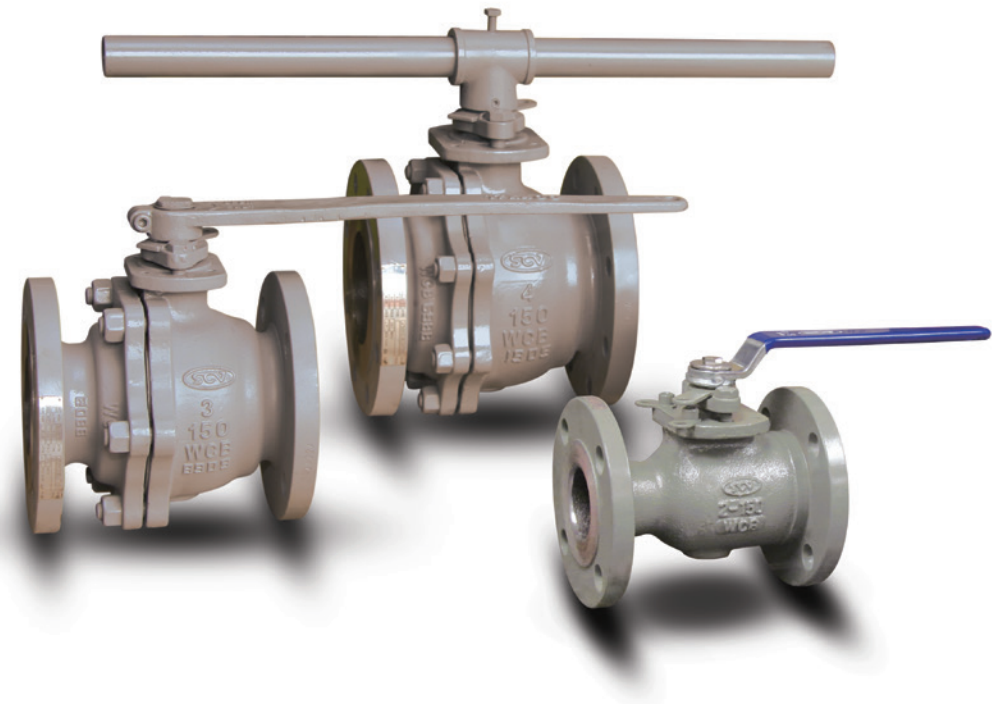

SCV VALVE

SCV VALVE manufactures some of the most dependable cast and forged steel Ball Valves in the industry. Our products are manufactured and tested in accordance with respective API, ASME, and ANSI standards. The SCV design offers many features and options beneficial for oil, gas, and liquid applications making it one of the most preferred floating ball valves on the market.

Innovative Valve Solutions.®

SCV Ball Valves

[Product Preview]

For more information call us @ (281) 482-4728 or visit our website @ www.scvvalve.com

1-Piece Flanged Floating Ball Valves - Reduced Port - B16.34

- Basic Design: ANSI/ASME B16.34, conforms to API 6D
- Face-to-Face Dimension: ANSI/ASME B16.10
- Flange End Dimension: ANSI/ASME B16.5
- Inspection & Testing: API 598
- Fire Safe Design: API 607/BS 6755

2-Piece Flanged Floating Ball Valves - Full & Reduced Por - B16.34

- Basic Design: ANSI/ASME B16.34, conforms to API 6D
- Face-to-Face Dimension: ANSI/ASME B16.10
- Flange End Dimension: ANSI/ASME B16.5
- Inspection & Testing: API 598
- Fire Safe Design: API 607/BS 6755

Note: Not recommended for throttling applications.

Note: SCV reserves the right to change any technical design and dimensional data without prior notice. Please contact SCV to confirm all Dimensions and Data offered in this catalog.

SCV Valve's product lines include commodity valves as well as specialty valves in all sizes, pressure classes & metallurgy; including carbon steel, stainless steel & exotic alloys. The valve types include:

- Thru Conduit Gates - Slab & Expanding Gate Designs
- 3-Piece Trunnion Mounted Balls
- Floating Balls
- Wedge Gates
- Globes
- Full Port Swing Checks
- Piston Checks
- Dual Plate Checks - Wafer & Lug Designs
- Pressure Balanced Lubricated Plugs

SCV Valve's high quality standards demand 100% pressure testing of every valve to insure its reliability and full customer satisfaction. We pride ourselves with high quality products, timely deliveries, and competitive prices.

Company History

The SCV valve brand was established in 1972. The primary focus of the Company was to provide full inline field service for valve maintenance as well as in house valve modifications. While serving the Power Industry, Paper & Pulp, Oil & Gas, and the Petro Chemical Industry; through years of dedication and commitment to quality and service, SCV had become one of the largest full range, field service companies, with a reputation for superior quality.

In the mid 1970s, the SCV brand entered the valve manufacturing industry, primarily serving the Power Industry. Since that time, the SCV brand has expanded its products to cover a broad range of valves. SCV Valve holds the API 6A & API 6D Monogram, API Q1 Quality Management System, and ASME "R" stamp. The manufacturing facility, sales and projects office is located in Santa Fe, Texas.

Mission Statement

SCV Valve is committed to consistently providing products that meet or exceed customer and regulatory specifications. SCV Valve aims to enhance customer satisfaction through implementing the highest levels of quality standards while assuring full conformity to those requirements.

Table of Contents

Page

Table of Contents....1
Complete Product Line....2
Certifcations....3
- American Petroleum Institute (API)
- ISO 9001:2008
- Canadian Registration Numbers
- CE PED

Figure Number Chart....4 & 5
Technical Data for Optional Seal & Seat Selections....6
SCV Valve Soft Good Chemical Compatibility....7
Seal & Seat Pressure Temperaure Chart....7
Valve ID Tag & Valve Markings Identification....8

1-PIECE FULL PORT FLANGED FLOATING BALLS - REDUCED PORT....9
Expanded View....10
Bill of Materials & Features....11
150 Class Reduced Port....12
300 Class Reduced Port....13

2-PIECE FULL PORT FLANGED FLOATING BALLS - FULL PORT....14
Expanded View....15
Bill of Materials & Features....16
150 Class Full Port....17
300 Class Full Port....18
600 Class Full Port....19
1500 Class Full Port....20
Cv Values, Operating Torques....21
Pressure Temperature Ratings....22,23,24
Flange Dimensions....25 & 26
Terms and Conditions....27

Complete Product Line

Call SCV Valve today @ (281) 482-4728 for all your valve needs or visit us on the web @ www.scvvalve.com.

THRU CONDUIT GATES - SLAB & EXPANDING

Design: API 6D
Sizes: 2" - 42"
Class: 150 - 1500

Standard stock.

Design: API 6A
Sizes: 9", 11" & 13-5/8"
Pressure: 2000, 3000, 5000

Limited inventory availability.
All sizes and pressure
classes made to order.

PISTON CHECKS

Design: API 6D
Sizes: 2" - 24"
Class: 150 - 2500

Standard stock.

GLOBES

Design: API 623
Sizes: 2" - 24"
Class: 150 - 2500

Limited inventory availability.
All sizes and pressure
classes made to order.

3-PIECE TRUNNION BALLS

Design: API 6D
Sizes: 2" - 42"
Class: 150 - 2500

Standard stock.

Design: API 6A
Sizes: 2-1/16" - 7-1/6""
Pressure: 2000, 3000, 5000

Limited inventory availability.
All sizes and pressure
classes made to order.

Bore Coating: Scotchkote™ 134

FULL PORT SWING CHECKS

Design: API 6D
Sizes: 2" - 36"
Class: 150 - 2500

Standard stock.

Exterior Coating: Epoxy

WEDGE GATES

Design: API 600
Sizes: 2" - 48"
Class: 150 - 2500

Limited inventory availability. All sizes
and pressure classes made to order.

FLOATING BALL VALVES

Design: B16.34
Sizes: 1/2" - 12"
Class: 150 - 1500

Standard stock.

PRESSURE BALANCED LUBRICATED PLUGS

Design: API 6D
Sizes: 2" - 36"
Class: 150 - 2500

Standard stock.

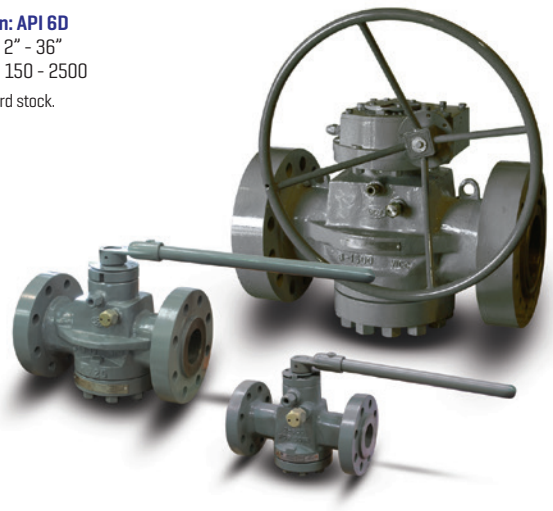

Certifications & Registrations

American Petroleum Institute (API)

API 6A Certification

Certificate of Authority to use the Official API Monogram
License Number: 6A-1190 ORIGINAL

The American Petroleum Institute hereby grants to

SCV VALVE
3521 FM 646 Road North
Santa Fe, TX

the right to use the Official API Monogram® on manufactured products under the conditions in the official publications of the American Petroleum Institute entitled API Spec Q1® and API-6A and in accordance with the provisions of the License Agreement.

In all cases where the Official API Monogram is applied, the API Monogram shall be used in conjunction with this certificate number: 6A-1190

The American Petroleum Institute reserves the right to revoke this authorization to use the Official API Monogram for any reason satisfactory to the Board of Directors of the American Petroleum Institute.

The scope of this license includes the following: Valves at PSL 1, PSL 2

QMS Exclusions: No Exclusions Identified as Applicable

Effective Date: DECEMBER 6, 2019
Expiration Date: DECEMBER 6, 2022

To verify the authenticity of this license, go to www.api.org/compositelist.

Vice President of Global Industry Services

American Petroleum Institute

Note: Extension letter availavle on our website.

API 6D Certification

Certificate of Authority to use the Official API Monogram
License Number: 6D-1099 ORIGINAL

The American Petroleum Institute hereby grants to

SCV VALVE
3521 FM 646 Road North
Santa Fe, TX

the right to use the Official API Monogram® on manufactured products under the conditions in the official publications of the American Petroleum Institute entitled API Spec Q1® and API-6D and in accordance with the provisions of the License Agreement.

In all cases where the Official API Monogram is applied, the API Monogram shall be used in conjunction with this certificate number: 6D-1099

The American Petroleum Institute reserves the right to revoke this authorization to use the Official API Monogram for any reason satisfactory to the Board of Directors of the American Petroleum Institute.

The scope of this license includes the following: Check Valves, Ball Valves, Plug Valves and Gate Valves

QMS Exclusions: No Exclusions Identified as Applicable

Effective Date: DECEMBER 6, 2019
Expiration Date: DECEMBER 6, 2022

To verify the authenticity of this license, go to www.api.org/compositelist.

Vice President of Global Industry Services

American Petroleum Institute

Note: Extension letter availavle on our website.

ISO 9001:2015 Certificate

ABS Quality Evaluations
Certificate Of Conformance
This is to certify that the Quality Management System of:

SCV Valve, LLC
3521 FM 646 Road North
Santa Fe, TX 77510
U.S.A.

has been assessed by ABS Quality Evaluations, Inc. and found to be in conformance with the requirements set forth by:

ISO 9001:2015

The Quality Management System is applicable to:

ENGINEERING, MANUFACTURING, SALES, AND SERVICE OF HIGH PERFORMANCE VALVE PRODUCTS.
PRODUCT RANGE INCLUDES ALL SEVERE SERVICE & HIGH PRESSURE APPLICATIONS

This certificate may be found on the ABS QE Website (www.abs-qe.com). For certificates issued in the People's Republic of China information may also be verified on the CNCA website (www.cnca.gov.cn)

Certificate No: 44703
Certification Date: 16 June 2010
Effective Date: 16 May 2019
Expiration Date: 15 June 2022
Revision Date: 16 May 2019

Dominic Townsend, President

Validity of this certificate is based on the successful completion of the periodic surveillance audits of the management system defined by the above scope and is contingent upon prompt written notification to ABS Quality Evaluations, Inc. of significant changes to the management system or components thereof.

ABS Quality Evaluations, Inc. 1701 City Plaza Drive, Spring, TX 77389, U.S.A.
Validity of this certificate may be confirmed at www.abs-qe.com/cert_validation.

Copyright 2011-2019 ABS Quality Evaluations, Inc. All rights reserved.

CE PED Certificate

HPi VS
HPi Verification Services

Certificate of Quality System Approval

This is to certify that the product listed below conforms to the requirements of the
Pressure Equipment Directive 2014/68/EU
Annex III Module H

Certificate Number: HPiVS/P1012-055-Q-04
Date of Issue: 17-Jul-2019
Date of Expiry: 23-Jun-2022
Surveillance due: 23-Jun-2020
Manufacturer: SCV Valve LLC
3521 FM 646 Road North, Santa Fe
Texas 77510

Description of Pressure Equipment: Ball valves, Check valves, Gate valves, Globe valves and Plug valves – Range: 1/2" – 48" Class 150 through 2500
Equipment Identification: CE plate for Cat.I to III
Other Certification Standards Applied: ABSQE ISO 9001 cert 44703
API 6A:2010, API 6D:2014
Report Reference: HPiVS/P1012-055-4

This Certificate is valid in any European Economic Area Member State.

This Report has been issued by HPi Verification Services Ltd. which is a body notified to the European Commission according to the provisions of the Pressure Equipment Directive (Notified Body number 1521).

This Report is issued following the assessment of the documentation and implementation of the Quality System in accordance with the provisions of the quoted Conformity Assessment Module of the above directive. The CE Mark may be affixed to the Pressure Equipment within the scope of approval as described above once the EU 'declaration of conformity' has been signed by the responsible person. The number '1521', being HPi Verification Services Ltd. Notified Body number should also be placed on the equipment dataplate.

Managing Director
Technical Manager

CE

EU Notified Body No. 1521
Company registered in England #7217086

© HPi Verification Services Ltd. 2019

HPi Verification Services Ltd.
The Manor House
Howbery Park, Wallingford
OX10 8BA, United Kingdom

Canadian Registration Number

- Alberta
  - 0C07063.2
- British Columbia
  - 0C07063.21
- New Brunswick
  - 0C07063.27
- New Foundland & Laborador
  - 0C07063.20
- Northwest Territory
  - 0C07063.25
- Novascotia
  - 0C07063.27
- Nunavut
  - 0C07063.2N
- Manitoba
  - 0C07063.24
- Ontario
  - 0C07063.25
- Prince Edward island
  - 0C07063.29
- Yukon
  - 0C07063.2

SCV Figure Number Chart

Note: SCV Figure Chart is subject to change without notice.

1	2	3	4	5	6	7	8
Valve Type	**Bore Size**	**Pressure Class**	**Body/Bonnet**	**Body Material**	**Trim Material**	**Ends**	**Operator**
BAL = Trunnion Ball Valve	49 = 1/4"	01 = 150	B = Bolted	02 = A352 LCC	02 = A352 LCC + ENP	A = RF x WE	B = Bare Stem
DBV = Double Ball Valve	50 = 1/2"	02 = 200	L = Lug Style	04 = A351 CF8	04 = A352 LCB + ENP	B = RTJ x WE	D = Dual Acting Actuator
DCK = Dual Plate Check Valve	75 = 3/4"	03 = 300	P = Pressure Seal	05 = A351 CF8C	06 = A216 WCC + ENP	C = Clamp	E = Electric Actuator
EPG = Expanding Gate Valve	01 = 1"	04 = 400	S = Seal Weld	06 = A351 CF8M	08 = A216 WCB + ENP	D = RF x RTJ	G = Gear
FBV = Floating Ball Valve	15 = 1-1/2"	06 = 600	T = Top Entry	08 = A216 WCC	09 = A351 CF8M	E = RTJ x RF	H = Handwheel
FCK = Full Port Swing Check Valve	02 = 2"	08 = 800	U = Union	09 = A217 WC9	10 = CR13	F = Flat	L = Lever
GAT = Wedge Gate Valve	21 = 2-1/16"	09 = 900	W = Wafer	10 = A216 WCB	11 = CR13 HF	H = Hub	O = Oil/Gas Actuator
GLB = Globe Valve	25 = 2-1/2"	11= 1000		11 = A352 LCB	12 = CR13 HF + HF	J = RTJ	S = Spring Return Actuator
PCK = Piston Check Valve	27 = 2-9/16"	15 = 1500		12 = A350 LF2	13 = A105 + ENP	K = WE x RF	Y = Hydraulic Actuator
PLG = Lubricated Plug Valve	03 = 3"	20 = 2000		13 = A105	15 = A350 LF2 + ENP	L = WE x RTJ	
RSB = Rising Stem Ball Valve	31 = 3-1/8"	25 = 2500		14 = A352 LC3	16 = A216 WCC + 316	N = TH x SW	
SCK = Conv. Port Swing Check Valve	37 = 3-9/16"	30 = 3000		15 = A217 C5	17 = 17-4 PH	M = SW x TH	
TCG = Slab Gate Valve	04 = 4"	37 = 3705		16 = A217 WC6	18 = A350 LF3 + ENP	R = RF	
	41 = 4-1/16"	45 = 4500		17 = 17-4 PH	20 = Alloy 20	S = SW	
	05 = 5"	50 = 5000		19 = A350 LF4	21 = Alloy 20 HF	T = TH	
	51 = 5-1/8"	60 = 6000		20 = Alloy 20	22 = A182 F22	W = WE	
	06 = 6"	10 = 10000		21 = A182 F11	30 = A29 4130		
	71 = 7-1/16"	05 = 15000		22 = A182 F22	31 = A182 321		
	08 = 8"	50 = 5000		23 = A350 LF3	32 = A182 316L		
	09 = 9"	60 = 6000		26 = A182 F91	33 = A182 304 HF		
	10 = 10"	10 = 10000		28 = A182 F9	34 = A182 304		
	11 = 11"	05 = 15000		29 = A217 C12	35 = A182 316 HF		
	12 = 12"			30 = A29 4130	36 = A182 316		
	13 = 13-5/8"			31 = A182 321	37 = A182 317 HF		
	14 = 14"			32 = A182 321L	38 = A182 317		
	16 = 16"			33 = A182 304L	39 = A29 1040		
	17 = 16-3/4"			34 = A182 304	40 = A29 4140		
	18 = 18"			35 = A182 316L	41 = A182 F6a Class 2		
	20 = 20"			36 = A182 316	44 = A182 F44 Duplex		
	22 = 22"			37 = A182 317L	47 = A182 347		
	24 = 24"			38 = A182 317	48 = A182 347 HF		
	26 = 26"			40 = A29 4140	50 = Monel		
	30 = 30"			41 = A182 F6A Class 2	51 = A182 F51 Duplex		
	32 = 32"			44 = A182 F44 Duplex	53 = A182 F53 Duplex		
	36 = 36"			47 = A182 347	55 = A182 F55 Duplex		
	40 = 40"			48 = A182 347L	57 = A537 Class 1 + ENP		
	42 = 42"			50 = Monel	60 = A105 + HF		
	48 = 48"			51 = A182 F51 Duplex	61 = A105 + Nitride + HF		
	52 = 52"			53 = A182 F53 Duplex	62 = Inconel 625		
	56 = 56"			55 = A182 F55 Duplex	63 = A352 LCC + Tungsten Carbide		
	60 = 60"			62 = Inconel 625	64 = A352 LCC + Nickel Boron		
				83 = Hastelloy B	65 = A216 WCC + Tungsten Carbide		
				84 = Hastelloy C	66 = A216 WCC + Nickel Boron		
				87 = A487 4C	67 = A105 + Tungsten Carbide		
				88 = A890-4A	68 = A105 + Nickel Boron		
				89 = A890-5A	69 = A350 LF2 + Tungsten Carbide		
				90 = Titanium	70 = A350 LF2 + Nickel Boron		
					71 = CR13 + Tungsten Carbide		
					72 = CR13 + Nickel Boron		
					73 = A182 410 +Tungsten Carbide		
					74 = A182 410 + Nickel Boron		
					78 = Inconel 718		
					81 = A350 LF2 + Nitride + HF		
					84 = A743 CA15		
					87 = A487 4C		
					88 = A890-4A		
					89 = A890-5A		
					90 = Titanium		
					92 = Inconel 925		
					99 = A105+NI+TRID-ST.6		

9	10	11	12	13	14	15
Bore Type	**Seal Material**	**Seat Material**	**Seat Insert/Overlay Material**	**Stem Material**	**Packing Material**	**Service**
F = Full Port	A = Aflas	08 = A216 WCB	B = Nickel Boron	A = A350 LF2 + ENP	B = Braided Graphoil	A = Stem Extension
R = Reduced Port	B = Buna	10 = CR13	D = Devlon	B = A105 + ENP	G = Graphite	B = By Pass
C = Conventional	E = EPDM	11 = CR13 HF	F = PTFE	C = A182 F6a Class 2	T = Teflon	C = Cryogenic
T = Regular Pattern	F = Fluorosilicone	13 = A105 + ENP	G = RTFE - Glass filled	D = 17-4 PH	V = Viton Duck	D = Double Piston Effect
U = Short Pattern	G = Graphite	14 = A105	H = Hard Face (Stellite 6)	E = 4130 + ENP		E = External Coating
V = Venturi Pattern	H = HNBR	15 = A350 LF2 + ENP	K = PCTFE	F = A182 F316		F = Dampener
	K = Kalrez	16 = A350 LF2	N = Nylon	G = A182 F51 Duplex		G = Geothermal
	L = Lip Seal	17 = 17-4 PH	P = Peek	H = A182 F56 Duplex		H = High Temperature
	N = Neoprene	20 = Alloy 20	R = RTFE - Carbon Filled	I = Inconel 625		I = Internal Coating
	P = Polyuerethane	30 = A29 4130	T = Tungsten Carbide			J = Linear Actuator (short yoke)
	R = NBR	31 = A182 321	V = Viton			L = Lock Open Device
	S = Silicone	32 = A182 316L	3 = 316			P = Pipe Pups
	T = Teflon	34 = A182 304	W = UHMWE			S = Standard Service
	U = Floursint	36 = A182 316				T = Special Thermal Relief
	V = Viton	37 = A182 317				W = Sub Sea
	3 = 304 Ring	38 = A182 317L				X = Special
	4 = 304 / Graphite	41 = A182 F6a Class 2				Y = Teflon Bolting
	5 = 316 Ring	47 = A182 347				Z = Zinc Bolting
	6 = 316 / Graphite	50 = Monel				
	7 = Soft Iron Ring	51 = F51 Duplex				
		53 = F53 Duplex				
		55 = F55 Duplex				
		62 = Inconel 625				
		78 = Inconel 718				
		84 = Hastelloy C				
		90 = Titanium				

Sample Figure Numbers & Descriptions

	Figure No. Chart Column	1	2	3	4	5	6	7	8	9	10	11	12	13	14	15
	Pressure Classes	**Type**	**Size**	**Class**	**Body Conf.**	**Body**	**Obturator**	**End**	**Oper**	**Bore Type**	**Seal**	**Seat.base**	**Seat/Insert**	**Stem**	**Packing**	**Service**
TRUNNION BALL	150, 300, 600	BAL	12	06	B	12	15	R	G	F	H	15	D	A	/	S
	12" 600 Trunnion Ball Valve, Bolted A350 LF2 Body, LF2 + ENP Obturator, RF Ends, Gear Operated, Full Bore, HNBR AED Seals, A350 LF2 + ENP Seat Base Material, Devlon Seat Inserts, A350 LF2 + ENP Stem, Standard Service, API 6D Design and Test, NACE MR-01-75 Compliant															
	900, 1500, 2500	BAL	12	15	B	12	41	J	G	F	H	41	D	C	/	S
	12" 1500 Trunnion Ball Valve, Bolted Configuration, A350 LF2 Body, A182 F6a Class 2 Obturator, RTJ Ends, Gear Operated, Full Bore, HNBR AED Seals, A182 F6a Class 2 Seat Base Material, Devlon Seat Inserts, A182 F6a Class 2 Stem, Standard Service, API 6D Design and Test, NACE MR-01-75 Compliant															
FLOATING BALL	ALL	FBV	12	01	B	10	36	R	L	F	3	36	R	F	/	S
	12" 150 Floating Ball Valve, Bolted Configuration, A216 WCB Body, A182 F316 Obturator, RF Ends, Lever Operated, Full Bore, A182 F316 Seat Base Material, Devlon Seat Inserts, A182 F316 Stem, Standard Service, API 608 Design, API 598 Test, NACE MR-01-75 Compliant															
DUAL PLATE WAFER CHECK	ALL	DCK	12	06	W	10	09	R	/	C	/	08	H	/	/	S
	12" 600 Dual Plate Check Valve, Wafer Configuration, A216 WCB Body, A351 CF8M Obturator, RF Ends, Conventional Bore, A216 WCB Seat Base Material, Hardface Seat Overlay, Standard Service, API 594 Design, API 598 Test, NACE MR-01-75 Compliant															
SLAB GATE	ALL	TCG	12	06	B	08	13	R	B	F	V	13	R	D	V	S
	12" 600 Thru Conduit Slab Gate Valve, Bolted A216 WCC Body, A105 + ENP Obturator, RF Ends, Bare Stem, Full Bore, Viton AED Seals, A105 + ENP Seat Base Material, RTFE Seat Inserts, 17-4 PH Stem, Viton Duck Packing, Standard Service, API 6D Design and Test, NACE MR-01-75 Compliant															
EXPANDING GATE	ALL	EPG	12	06	B	08	06	R	B	F	V	13	R	D	V	S
	12" 600 Thru Conduit Expanding Gate Valve, Bolted A216 WCC Body, A216 WCC + ENP Obturator, RF Ends, Bare Stem, Full Bore, Viton AED Seals, A105 + ENP Seat Base Material, RTFE Seat Inserts, 17-4 PH Stem, Viton Duck Packing, Standard Service, API 6D Design and Test, NACE MR-01-75 Compliant															
FULL PORT SWING CHECK	ALL	FCK	12	06	B	08	16	R	/	F	V	11	V	/	/	S
	12" 600 Full Port Swing Check Valve, Bolted A216 WCC Body, A216 WCC + 316 Obturator, RF Ends, Full Bore, Viton AED Seals, CR13 HF Seat Base Material, Viton Seat Inserts, Standard Service, API 6D Design and Test, NACE MR-01-75 Compliant															
PISTON CHECK	150, 300, 600, 900	PCK	12	06	B	08	61	R	/	C	V	14	H	/	/	S
	12" 600 Piston Check Valve, Bolted A216 WCC Body, A105 + Nitride + HF Obturator, RF Ends, Coventional Bore, Viton AED Seals, A105 Seat Base Material, Hardface Seat Overlay, Standard Service, API 6D Design and Test, NACE MR-01-75 Compliant															
	1500, 2500	PCK	12	15	B	08	61	R	/	C	V	41	H	/	/	S
	12" 1500 Piston Check Valve, Bolted A216 WCC Body, A105 + Nitride + HF Obturator, RF Ends, Coventional Bore, Viton AED Seals, A182 F6a Class 2 Seat Base Material, Hardface Seat Overlay, Standard Service, API 6D Design and Test, NACE MR-01-75 Compliant															
LUBRICATED PLUG	ALL	PLG	12	06	B	10	84	R	L	C	V	/	/	/	G	S
	12" 600 Lubricated Plug Valve, Bolted A216 WCB Body, A743 CA15 Obturator, RF Ends, Lever Operated, Coventional Bore, Viton AED Seals, Standard Service, API 6D Design and Test, NACE MR-01-75 Compliant															
WEDGE GATE	ALL	GAT	12	06	B	10	7	R	H	C	4	14	H	C	G	S
	12" 600 Wedge Gate Valve, Bolted A216 WCB Body, A216 WCB + Hardface Obturator, RF Ends, Handwheel Operated, Conventional Bore, 304 + Graphite Gasket, A105 Seat Base Material, Hardface Seat Overlay, A182 F6a Class 2 Stem, Graphite Packing, Standard Service, API 600 Design, API 598 Test, NACE MR-01-75 Compliant															
GLOBE	ALL	GLB	12	06	B	10	60	R	H	C	4	14	H	C	G	S
	12" 600 GlobeValve, Bolted A216 WCB Body, A105+ Hardface Obturator, RF Ends, Handwheel Operated, Conventional Bore, 304 + Graphite Gasket, A105 Seat Base Material, Hardface Seat Overlay, A182 F6a Class 2 Stem, Graphite Packing, Standard Service, API 623 Design, API 598 Test, NACE MR-01-75 Compliant															

Note: Subject to change without notice.

Control #: MSF 3.5-16 rev 12

Technical Data for Optional Seal & Seat Selections

Optional Seal Selections

Code	Material	Description
B	BUNA	Also called Buna N or Nitrile, this sealing material is widely used because of its compatability with most hydraulic fluid media, including petroleum oils, water, water glycol, Di-Ester based fluids, air, and inactive gases. The temperature of this material ranges from -54C to +135C [-65F to +275F].
N	NEOPRENE	This sealing material is excellent for refrigerants, amonia, and freon. Its temperature range is from -37C to +107C [-35F to +225F].
E	EPDM	Also called Ethylene-Propylene, this sealing material is recommended for low pressure steam, hot water, phosphate ester base fluid, weak alkalines, and acids. This material is not recommended for petroleum service, hydrocarbons, alchohol, and radiation. Its temperature range is -54C to 149C [-65F to +250F].
V	VITON	Also called Fluorocarbon Rubber (FKM), this material is known for being excellent in condition up to +204C [+400F]. Viton offers excellent resistence to aggressive fuels and chemicals.
T	PTFE	Teflon has excellent resistence to a wide range of chemicals. It is excellent at pressures below 1500 PSI. It can withstand temperatures up to +204C(+400F).
R	NBR	NBR is typically resistant to mineral oil-based lubricants and greases, hydraulic fluids, hydrocarbons, and water. NBR is not resistant to polar solvents or chlorinated hydrocarbons. The material's temperature range is from -30C to +100C [-22F to +212F].
H	HNBR	HNBR is simply hydrogenated NBR. It is typically resistant to mineral oil-based lubricants and greases, hydraulic fluids, hydrocarbons, and water just like NBR. HNBR is more resistent to heat, o-zone, and aging than NBR. The material's temperature range is from -30C to +100C [-22F to +212F].
S	SILICONE	This material is capable of operating in a wide temperature range and has excellent resistence to o-zone, water, weathering, and aging. This material is generally not resistent to fuels, oils, steams, acids, or high pressures. This materials temperature range is from -65C to +250C [-85F to +482F].
F	FLUOROSILICONE	This material is far more resistent to oils and fules than other silicones. The temperature range, however, is limited from -73C to +177C [-100F to +350F].
G	GRAPHOIL	Grafoil is chemically resistant to attack from nearly all organic and inorganic fluids with exception of highly oxidizing chemicals and highly concentrated oxidizing mineral acids. The material is good up to +538C [+1000F] as well as at cryogenic temperatures.
U	FLUORSINT	This material contains a mica filler and offers superb mechanical properties such as resistence to abrasion, wear, and extrusion. It is ideal for high pressure applications and offers low co-efficient of friction. Its temperature range is from -46C to +343C [-50F to +650F].

Note: Additional options available upon request

Optional Seat Selections

Code	Material	Description
D	DEVLON	Devlon is a polyamide with additives which allow it to perform at -46C to +121C [-50F to +250F]. This material covers a wide range of applications while having excellent wear poperties, low friction, and improved impact strength.
M-S	METAL (STELLITE)	Metal seats hardfaced with Stellite 6 are recommended for use in high temperature fluid and gas applications. The temperature range of the material allows it to get up to the maximum temperature of the valve body material.
M-TC	METAL (TUNGSTEN CARBIDE)	Metal seats hardfaced with Tungsten Carbide are recommended for use in high temperature fluid and gas applications. The temperature range of the material allows it to get up to the maximum temperature of the valve body material.
N	NYLON	Nylon is offered for high pressure applications. The material is ideal for use in high pressure air, oil, and other gas media but is not suitable for strong oxidizing agents. The temperature range of this material is -34C to +121C [-29F to +250F].
O	NOVA	This Teflon based product is filled with glass amorphous carbon powder and graphite. It has a lower thermal contraction-expansion than PTFE and is ideal for steam or thermal fluid applications up to +288C [+550F].
P	PEEK	Peek offers a unique combination of chemical, mechanical, and thermal properties. This material is excellent for high temperatures up to +260C [+500F].
T	TEFLON (VIRGIN PTFE)	PTFE is a fluorocarbon-based polymer. This material has excellent chemical resistance and co-efficient of friction. The material is not recommended for liquid alkalis and flourine. Its temperature range is good from -34C to +204C [-30F to +400F].
K	PCTFE	Kel-F is a fluorocarbon based polymer offering a unique combination of physical and mechanical characteristics such as non-flamability, chemical resistance, and near zero moisture absorbtion. The temperature range of this material is from -240C to +204C [-400F to +400F].
R	RPTFE	PTFE's mechanical properties are enhanced by adding a percentage of filler material to provide improved strength, stability, and wear resistance. The temperature range of this material is -46C to +232C [-50F to +450F].

Note: Additional options available upon request

Seal & Seat Pressure Temperature Chart

This chart depicts pressure and temperature ratings for common plastics and elastomers used in SCV Valve products.

SCV VALVE SOFT GOOD CHEMICAL COMPATIBILITY

	SEAL MATERIAL			SEAT MATERIAL			
	Viton	HNBR	Kalrez	RTFE	Nylon	Devlon	PEEK
Amines	X	X	●	●	X	X	●
Ammonia	X	X	●	●	●	●	●
Butane	●	●	●	●	●	●	●
Carbon Dioxide	●	●	●	●	●	●	●
Crude Oil	●	●	●	●	●	●	●
Ethane	●	●	●	●	X	X	●
Ethylene	●	●	●	●	●	●	●
Glycol	●	●	●	●	●	X	●
Hydrocarbon	●	●	●	●	●	●	●
Hydrogen	●	●	●	●	●	●	●
Jet Fuel	*	*	●	●	X	X	●
Methane	●	●	●	●	●	●	●
Natural Gas	●	●	●	●	●	●	●
Nitrogen	●	●	●	●	●	●	●
Propane	●	●	●	●	●	●	●
Propylene	●	X	●	●	●	●	●

* Viton OK for JP-3/4/5/6/8/9/10. * HNBR OK for JP-3/4/5/6.

PRESSURE TEMPERATURE CHART

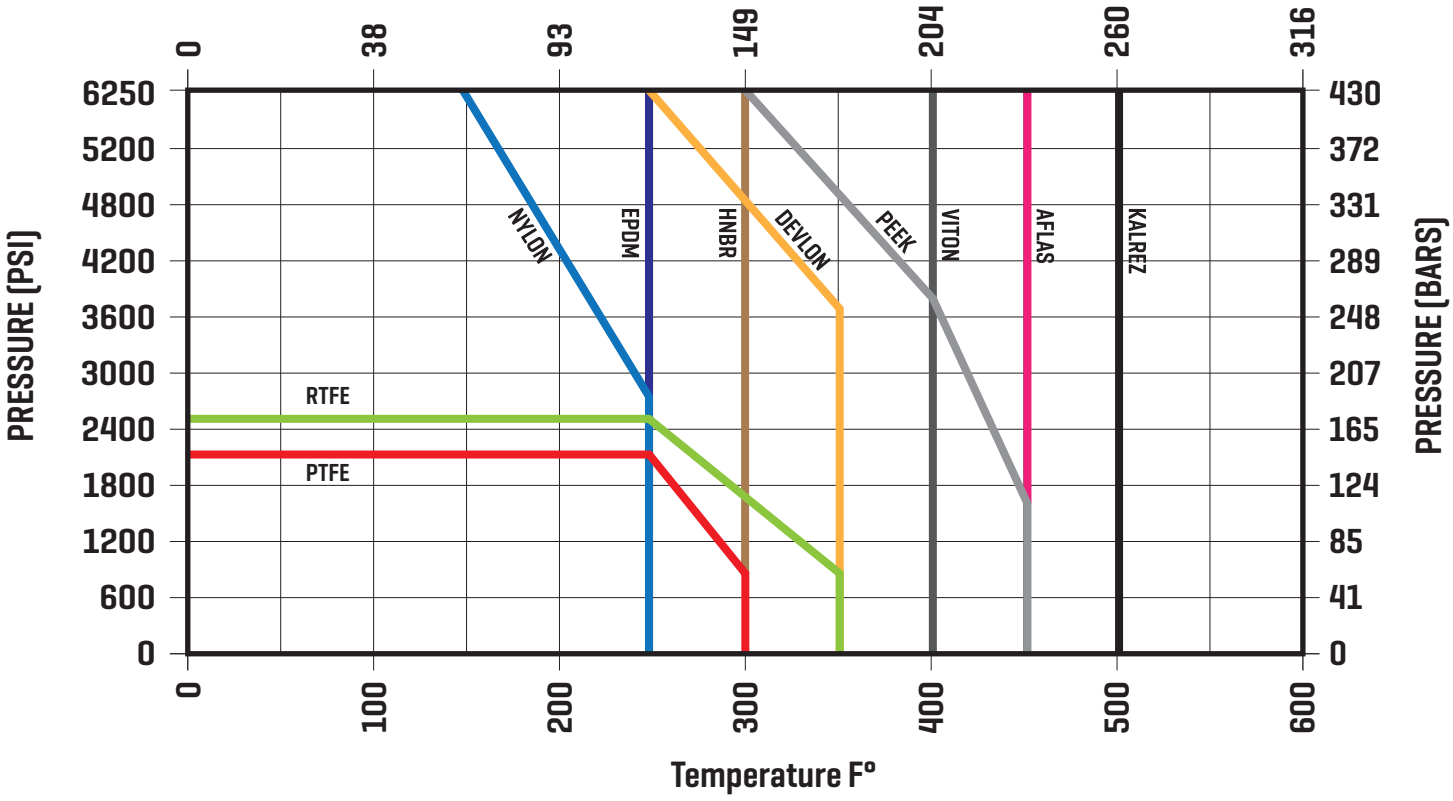

Valve ID Tag & Valve Markings Identification

Valve ID Tag

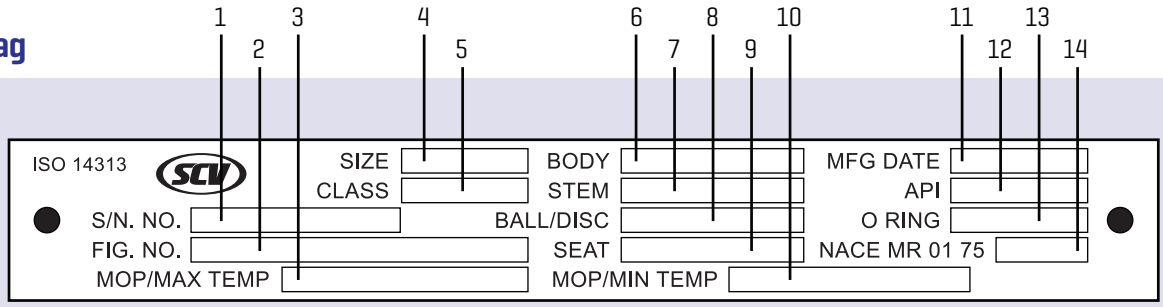

No.	Figure Number Code	Description
1	Serial Number	Identifies certified manufacturers serial number
2	Figure Number	Identifies the detailed valve configuration (valve type, bore size, pressure class, materials, etc.)
3	MOP/Max. Temp.	Identifies the maximum operating pressure in PSI and maximum operating temperature in Fahrenheit
4	Size	Identifies bore size
5	Pressure Class	Identifies pressure classifications per API requirements
6	Body Material	Identifies body metal material composition (A105, WCB, F51, CF8M, etc.)
7	Stem Material	Identifies stem material composition (A105, 410SS, 17-4pH, etc.)
8	Ball/Disc Material	Identifies ball/disc material composition (A105, 316SS, ENP, etc.)
9	Seat Material	Identifies seat material composition (PEEK, Teflon, Nylon, etc.)
10	MOP/Min. Temp.	Identifies the maximum operating pressure in PSI and minimum operating temperature in Fahrenheit
11	Manufacturing Date	Identifies the date the valve manufacturing completion date
12	API Conformance	Identifies API conformance (600, 6D, 6A, etc.)
13	O Ring	Identifies the O Ring material composition (Viton, Viton GLT, etc.)
14	NACE MR 01 75	Identifies corrosion resistance

Valve Markings

No.	Valve ID Components
1	Tag
2	Brand
3	Size
4	Pressure Class
5	Body Material
6	Heat Number

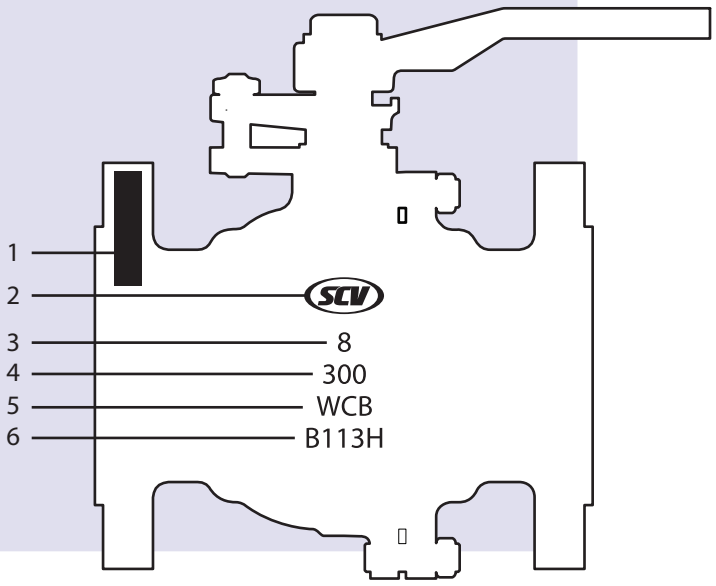

Note: SCV reserves the right to modify our products for improvement without prior notice.

SCV VALVE

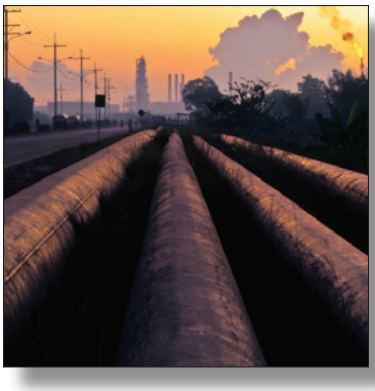

1-Piece Flanged Floating Ball Valves
Reduced Port
Class: 150 - 300/Sizes: 1-1/2" - 12"

Design and Manufacturing Standards	
Basic Design	ANSI/ASME B16.34, conforms to API 6D
Face-to-Face Dimension	ANSI/ASME B16.10
Flange End Dimension	ANSI/ASME B16.5
Inspection & Testing	API 598
Fire Safe Design	API 607/BS 6755

1-Piece Flanged Floating Ball Valves - Reduced Port

[Expanded View]

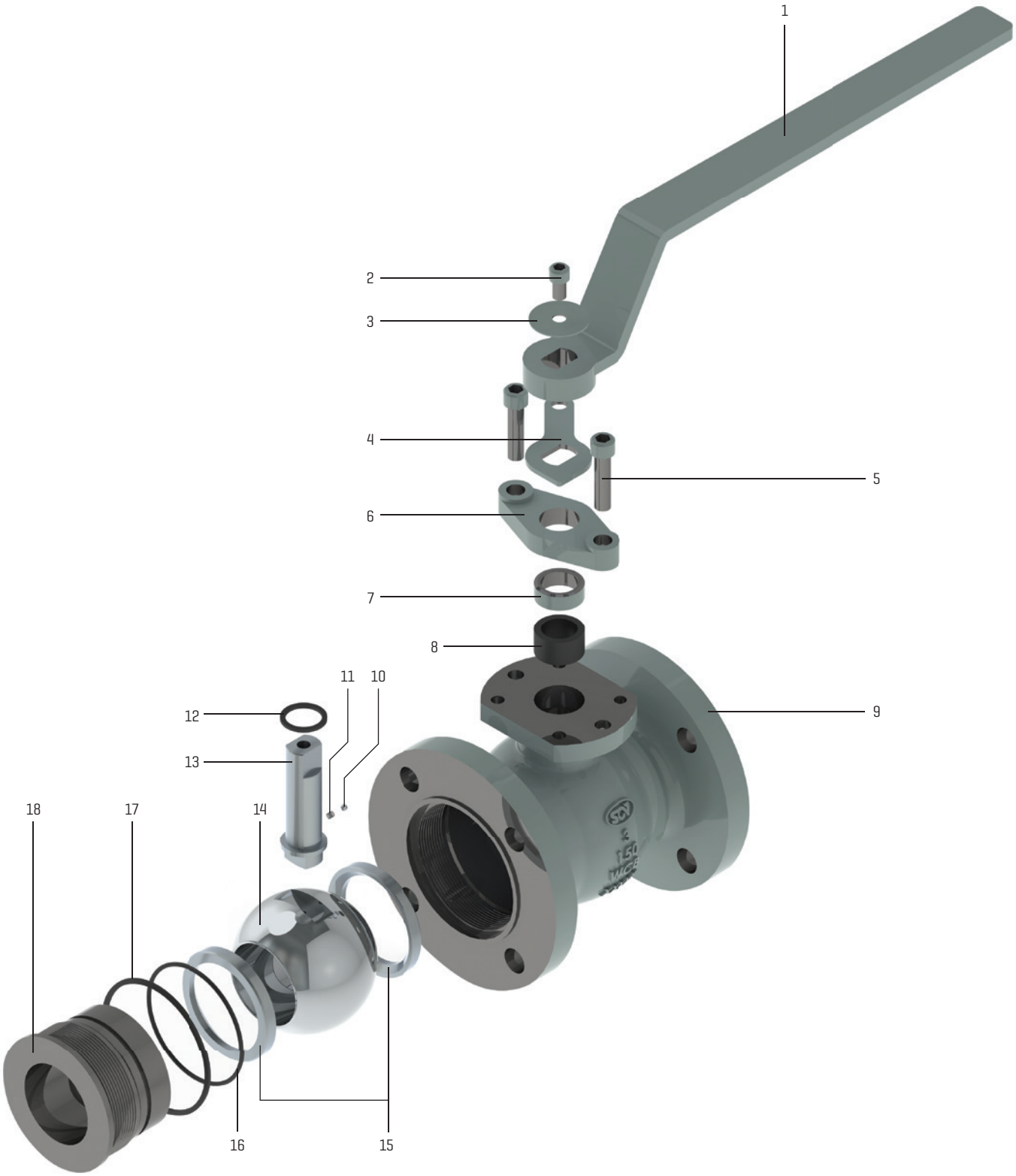

1-Piece Flanged Floating Ball Valves - Reduced Port

[Bill of Materials & Features]

Bill of Materials

No	Name of Part	Material
1	Handle	Carbon Steel
2	SHCS	ASTM A193 - BB
3	Name Plate	304 SS
4	Handle Stop	304 SS
5	SHCS	ASTM A193 - BB
6	Gland Flange	ASTM A351 - CF8
7	Gland	ASTM A351 - CF8
8	Gland Packing	Graphite
9	Body	ASTM A216 - WCB
10	Ball	ASTM A276 - 316
11	Anti- Static Spring	ASTM A580 - 316
12	Thrust Washer	RTFE
13	Stem	ASTM A276 - 316
14	Ball	ASTM A351 - CF8
15	Seat	PTFE
16	O-Ring	VITON
17	Gasket	316 SS + Graphite
18	Cap	ASTM A216 - WCB

Note: Additional materials available upon request

Features

1-piece body design with flanged ends for fast installation
Solid ball construction provides structural integrity and minimizes flow turbulence
Mounting pad complies with ISO 5211 for ease and interchangeability of actuation
Anti-static devices
Basic design complies with ASME/ANSI B16.34
Flanged ends comply with ASME/ANSI B16.5
Face-to-face dimensions comply with ASME/ANSI B16.10
Fire Safe Design: API 607/BS 6755
NACE MR 01-75
Hydrostatic and pnuematic test are conducted per standard, API 6D
The finishes of contact face of end flanges are machined 125 - 250 AARH with serrated spiral finish

1-Piece Flanged Floating Ball Valves - Reduced Port
Size: 1-1/2" - 12"
Class: 150

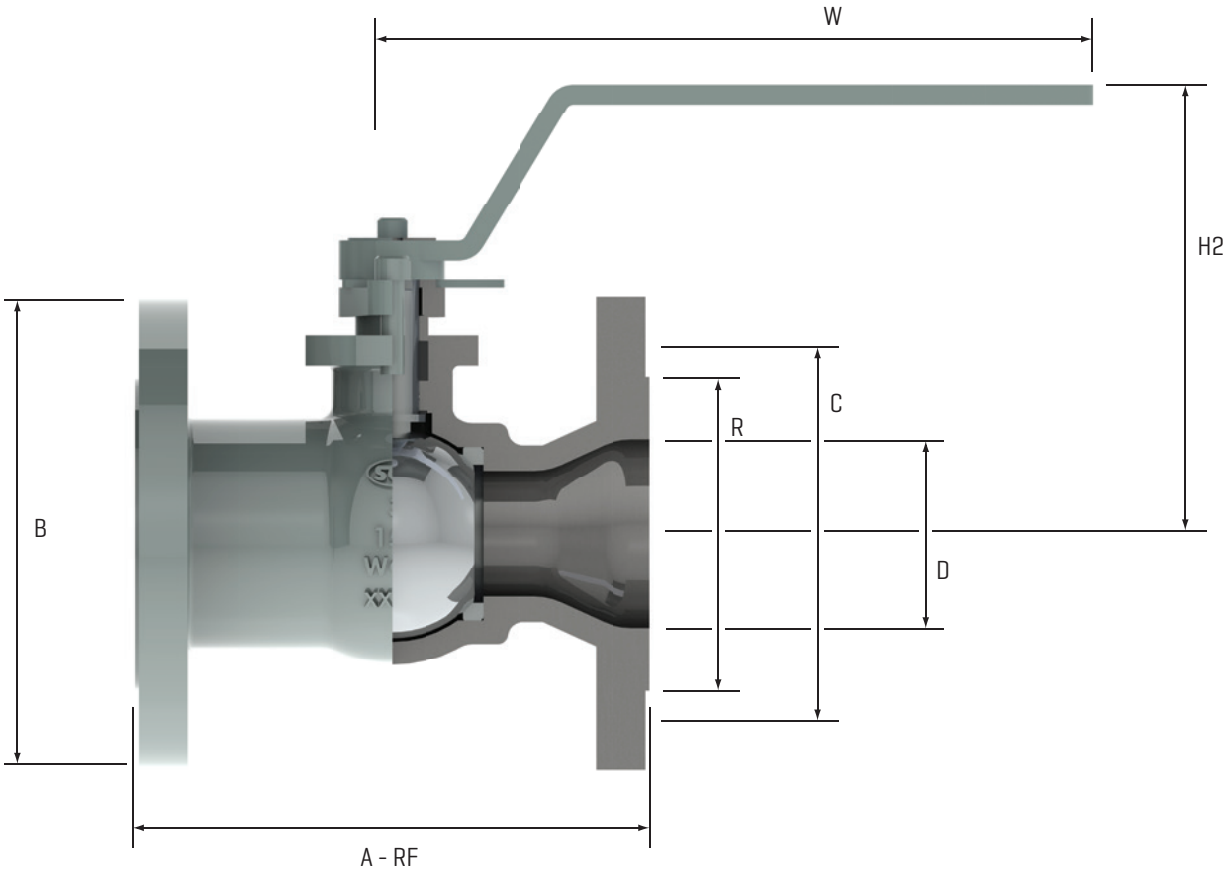

CLASS 150	Size		Bore	End - to - End	Raised Face OD	Bolt Circle Diameter	Flange OD	Center - to - Top	Lever Length	Weights LBS/KG
			D	A - RF	R	C	B	H2	W	
	IN	1.5*	1	6.5	2.88	3.88	5.00	4	9.06	13
	MM	40	25	165	73	99	127	102	230	6
	IN	2*	1.5	7	3.62	4.75	6.00	5	9.06	19
	MM	50	38	178	92	121	152	127	230	9
	IN	2.5*	2	7.5	4.12	5.50	7.00	5.6	15.75	30
	MM	65	51	191	105	140	178	142	400	14
	IN	3*	2.32	8	5.00	6.00	7.50	6.1	15.75	38
	MM	80	59	203	127	152	191	154	400	17
	IN	4*	3	9	6.19	7.50	9.00	6.7	18.11	66
	MM	100	76	229	157	191	229	170	460	30
	IN	6*	4	10.5	8.50	9.50	1 1.00	8.1	21.65	149
	MM	150	102	266.7	216	241	279	206	550	68
	IN	8	5.67	11.5	10.62	11.75	13.50	10.9	39.37	228
	MM	200	144	292	270	299	343	278	1000	103
	IN	10	7.32	13	12.75	14.25	16.00	12.8	39.37	455
	MM	250	186	330	324	362	406	325	1000	206
	IN	12	8.66	14	15	17	19	16.5	39.37	638
	MM	300	220	356	381	432	483	419	1000	289

* = Lever operated

1-Piece Flanged Floating Ball Valves - Reduced Port
Size: 1-1/2” - 10”
Class: 300

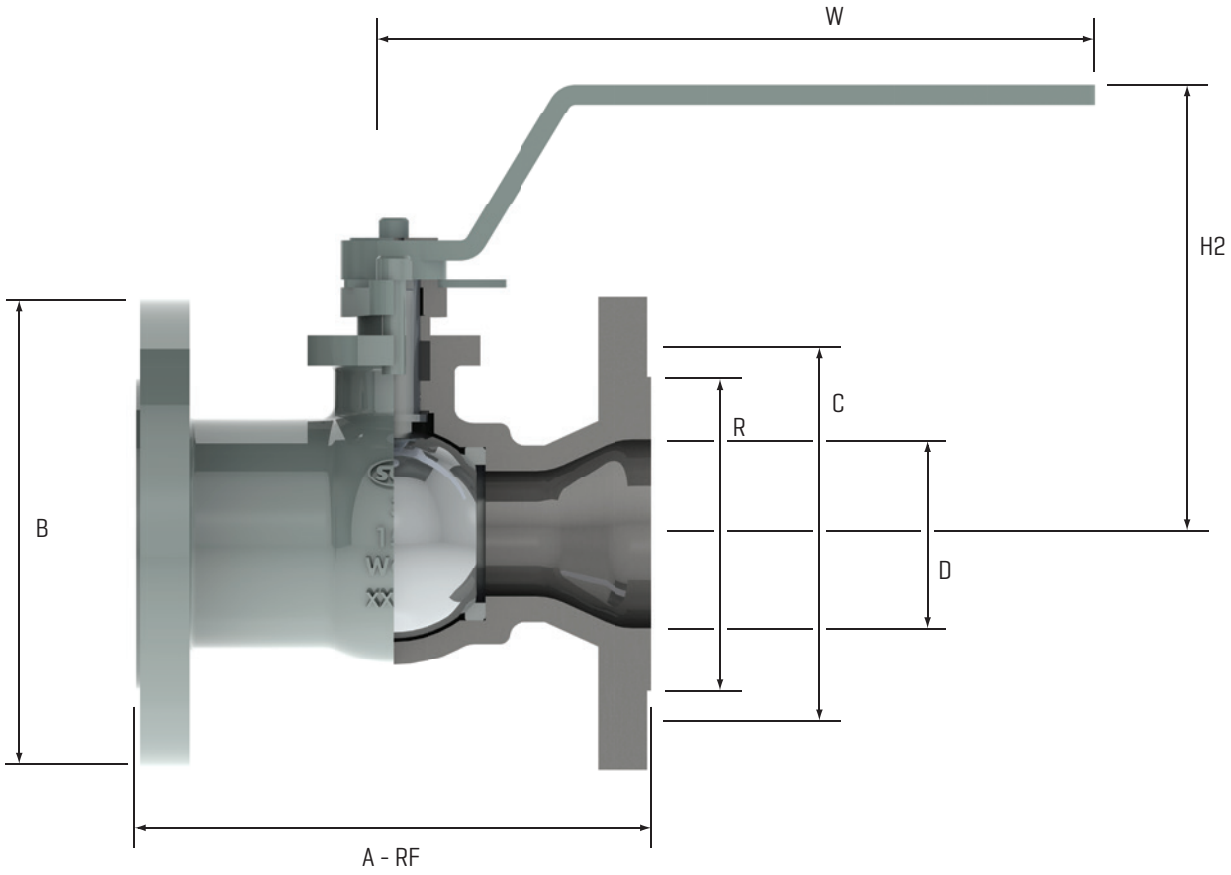

CLASS 300	Size		Bore	End - to - End	Raised Face OD	Bolt Circle Diameter	Flange OD	Center - to - Top	Lever Length	Weights LBS/KG
			D	A - RF	R	C	B	H2	W	
	IN	1.5*	1	7.5	2.88	4.50	6.12	4	9.06	21
	MM	40	25	191	73	114	155	102	230	10
	IN	2*	1.5	8.5	3.62	5.00	6.50	5	9.06	29
	MM	50	38	216	92	127	165	127	230	13
	IN	3*	2.32	11.14	5.00	6.62	8.25	6.1	15.75	60
	MM	80	59	283	127	168	210	154	400	27
	IN	4*	3	12	6.19	7.88	10.00	6.7	18.11	129
	MM	100	76	305	157	200	254	170	460	59
	IN	6*	4	15.87	8.50	10.62	12.50	8.1	21.65	182
	MM	150	102	403	216	270	318	206	550	83
	IN	8	5.67	16.5	10.62	13.00	15.00	10.9	39.37	290
	MM	200	144	419	270	330	381	277	1000	132
	IN	10	7.32	18	12.75	15.25	17.50	12.8	39.37	490
	MM	250	186	459	324	387	445	325	1000	222

* = Lever operated

SCV VALVE

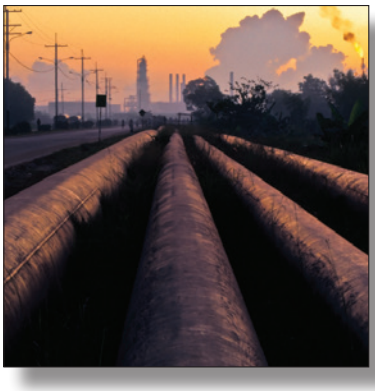

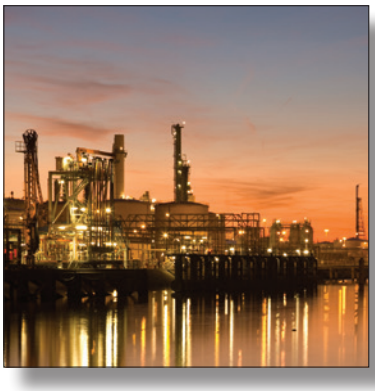

2-Piece Flanged Floating Ball Valves
Full Port
Class: 150 - 1500/Sizes: 1/2” - 12”

Design and Manufacturing Standards	
Basic Design	ANSI/ASME B16.34, conforms to API 6D
Face-to-Face Dimension	ANSI/ASME B16.10
Flange End Dimension	ANSI/ASME B16.5
Inspection & Testing	API 598
Fire Safe Design	API 607/BS 6755

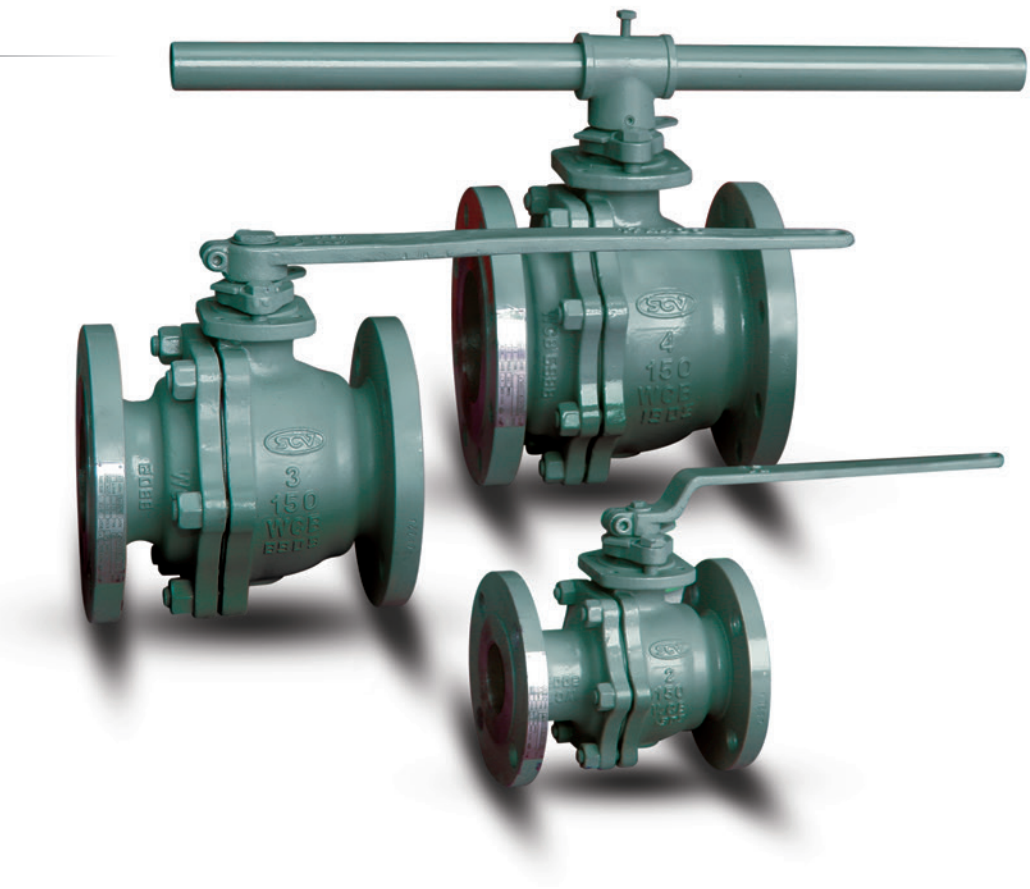

2-Piece Flanged Floating Ball Valves - Full Port

[Expanded View]

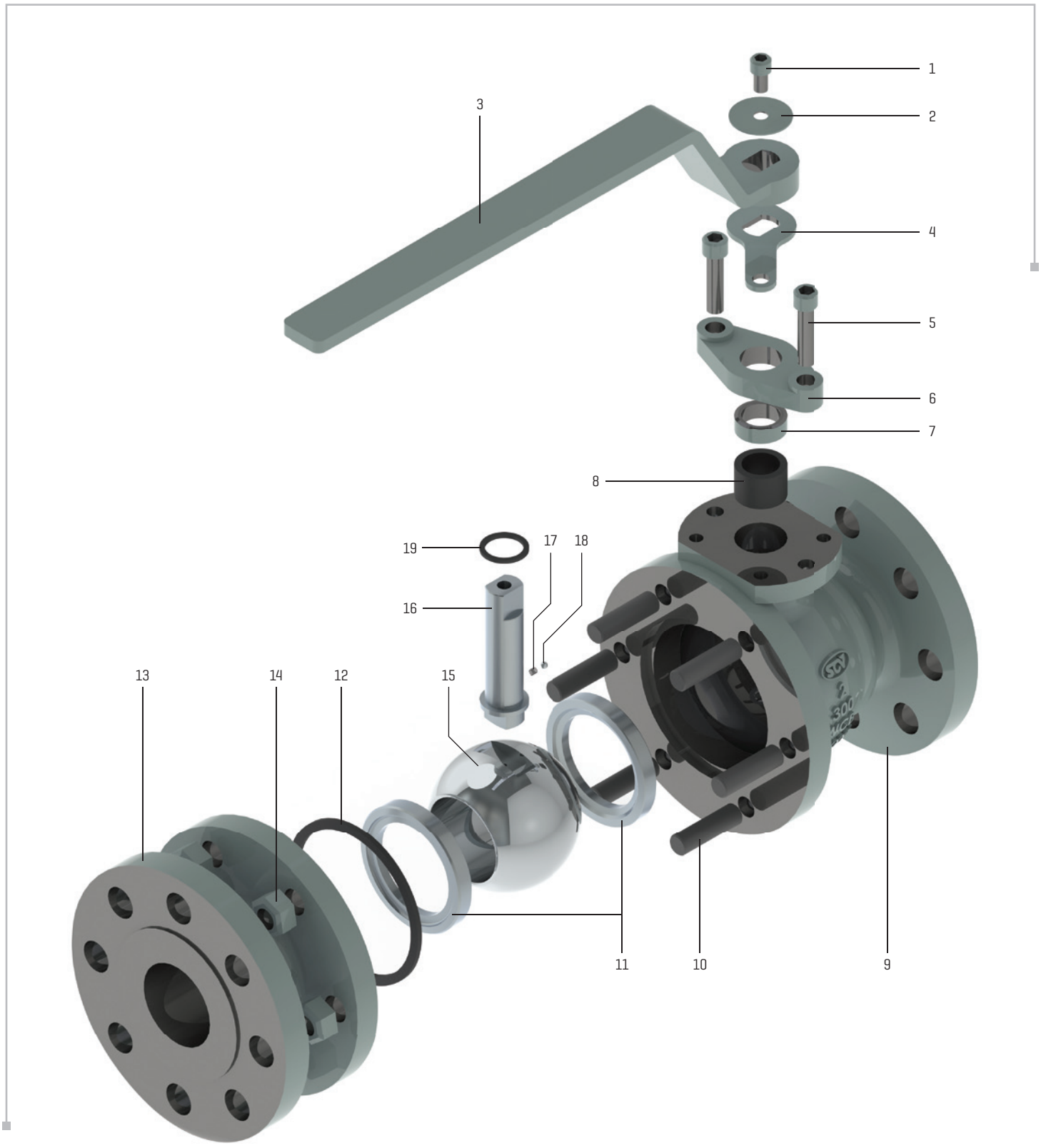

2-Piece Flanged Floating Ball Valves - Full Port

[Bill of Materials & Features]

Bill of Materials

No	Name of Part	Material
1	SHCS	304 SS
2	Name Plate	304 SS
3	Handle	Carbon Steel
4	Handle Stop	304 SS
5	SHCS	304 SS
6	Gland Flange	ASTM A351 - CF8
7	Gland	ASTM A351 - CF8
8	Stem Packing	Graphite
9	Body	ASTM A216 - WCB
10	Stud	GR. B7
11	Seat	PTFE
12	Body Gasket	316 + Graphite
13	Body End Cap	ASTM A216 - WCB
14	Heavy Hex Nut	GR. 2H
15	Ball	ASTM A351 - CF8M/316
16	Stem	ASTM A276-316
17	Anti- Static Spring	316 SS
18	Ball	316 SS
19	Thrust Washer	PTFE

Note: Additional materials available upon request

Features

Split body design with flanged ends for fast installation, in-line maintenance and rebuilding
Solid ball construction provides structural integrity and minimizes flow turbulence
Mounting pad complies with ISO 5211 for ease and interchangeability of actuation
Bottom-loaded blow-out proof stem
Investment cast body & end cap on sizes 1/2" to 4". Sand cast body & end cap on sizes 5" to 10"
Body joint is designed to prevent excessive compression of valve internals, resulting in a consistent and low operating torque
Basic design complies with ASME/ANSI B16.34
Flanged ends comply with ASME/ANSI B16.5
Face-to-face dimensions comply with ASME/ANSI B16.10
Tested according to ANSI/ASME B16.34 & API 598
Fire Tested to API 607/BS 6577

2-Piece Flanged Floating Ball Valves - Full Port
Size: 1/2" - 12"
Class: 150

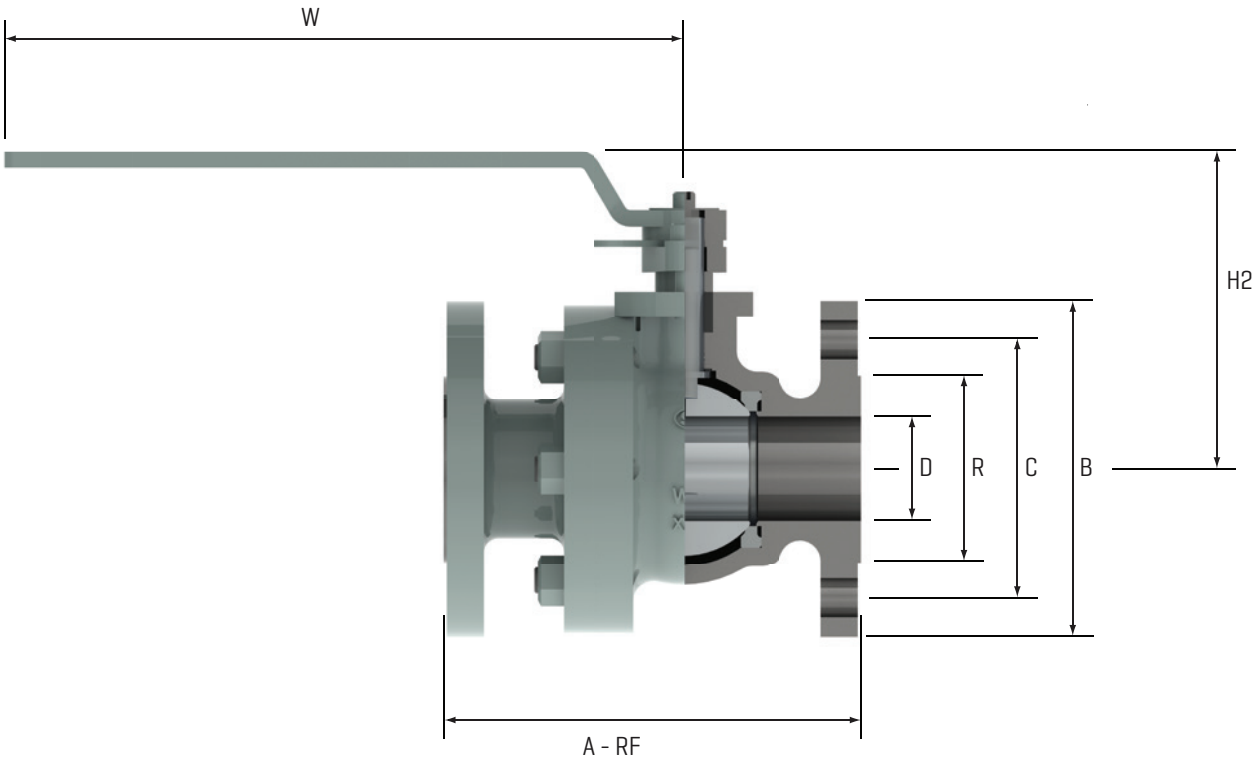

CLASS 150	Size		Bore	End - to - End	Raised Face OD	Bolt Circle Diameter	Flange OD	Center - to - Top	Lever Length	Weights LBS/KG
			D	A - RF	R	C	B	H2	W	
	IN	.5*	.5	4.25	1.38	2.38	3.50	3.15	5.12	5
	MM	15	13	108	35	61	89	80	130	2.3
	IN	.75*	.75	4.62	1.69	2.75	3.88	3.27	5.12	7
	MM	20	19	117	43	70	99	83	130	3
	IN	1*	1	5.00	2.00	3.12	4.25	3.82	6.30	10
	MM	25	25	127	51	79	108	97	160	4.5
	IN	1.5*	1.5	6.50	2.88	3.88	5.00	4.37	9.06	15
	MM	40	38	165	73	99	127	111	230	7
	IN	2*	2	7.00	3.62	4.75	6.00	4.65	9.06	21
	MM	50	51	178	92	121	152	118	230	9.5
	IN	2.5*	2.5	7.50	4.12	5.50	7.00	5.67	15.75	33
	MM	65	64	191	105	140	178	144	400	15
	IN	3*	3	8.00	5.00	6.00	7.50	6.06	15.75	42
	MM	80	76	203	127	152	191	154	400	19
	IN	4*	4	9.00	6.19	7.50	9.00	6.85	18.11	73
	MM	100	102	229	157	191	229	174	460	33
	IN	6*	6	15.50	8.50	9.50	1 1.00	9.45	21.65	165
	MM	150	152	394	216	241	279	240	550	75
	IN	8	8	18.00	10.62	11.75	13.50	11.81	39.37	253
	MM	200	203	457	270	299	343	300	1000	115
	IN	10	10	21.00	12.75	14.25	16.00	13.98	39.37	506
	MM	250	254	533	324	362	406	355	1000	230
	IN	12	12	21	16.00	17.00	19.00	18.9	39.37	864
	MM	300	305	533	406.4	431.8	482.6	480	1000	392

* = Lever operated

2-Piece Flanged Floating Ball Valves - Full Port
Size: 1/2” - 10”
Class: 300

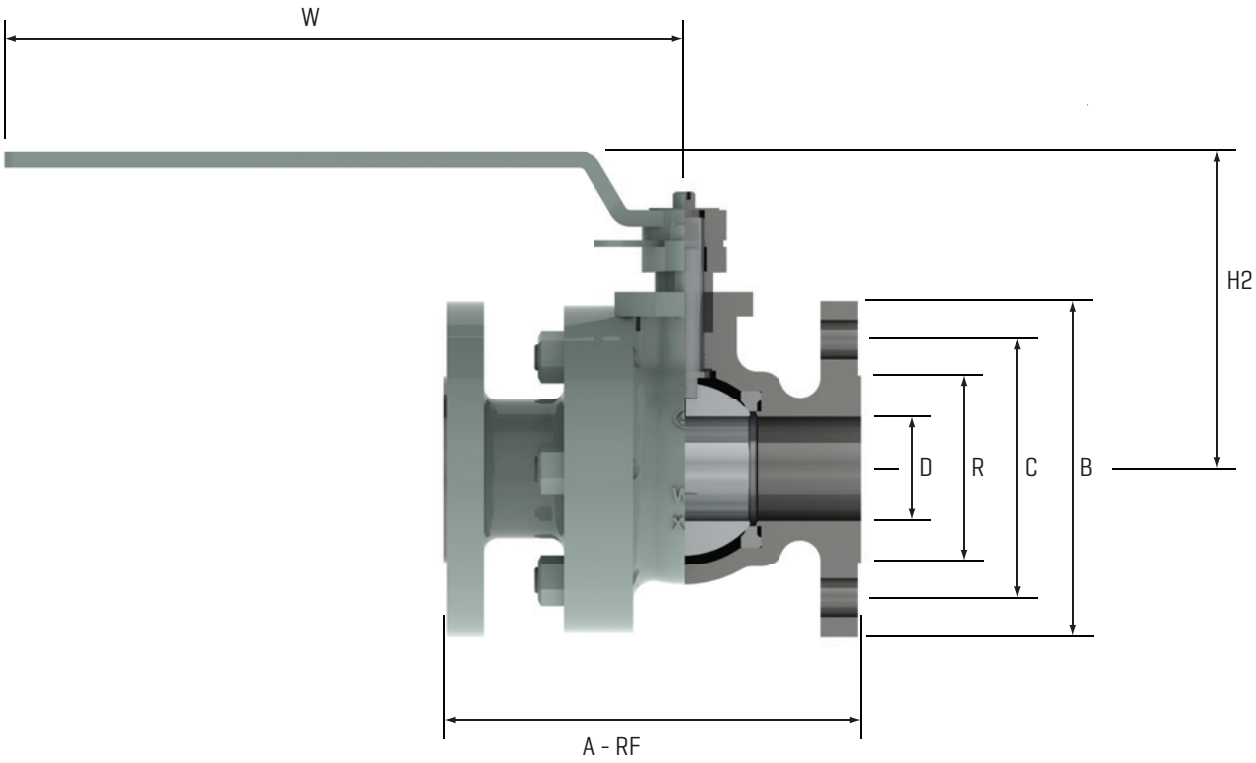

CLASS 300	Size		Bore	End - to - End	Raised Face OD	Bolt Circle Diameter	Flange OD	Center - to - Top	Lever Length	Weights LBS/KG
			D	A - RF	R	C	B	H2	W	
	IN	.5*	0.59	5.50	1.38	2.62	3.75	2.48	5.12	5.5
	MM	15	15	140	35	67	95	63	130	2.5
	IN	.75*	.079	6.00	1.69	3.25	4.62	2.68	5.12	8
	MM	20	20	152	43	83	117	68	130	3.6
	IN	1*	1.00	6.50	2.00	3.5	4.88	2.99	6.30	12
	MM	25	25	165	51	89	124	76	160	5.5
	IN	1.5*	1.57	7.50	2.88	4.50	6.12	3.46	9.06	23
	MM	40	40	191	73	114	155	88	230	10.5
	IN	2*	1.97	8.50	3.62	5.00	6.50	3.70	9.06	32
	MM	50	50	216	92	127	165	94	230	14.5
	IN	2.5*	2.56	9.50	4.12	5.88	7.50	4.53	15.75	52
	MM	65	65	241	105	149	191	115	400	23.5
	IN	3*	3.15	11.12	5.00	6.62	8.25	4.72	15.75	66
	MM	80	80	282	127	168	210	120	400	30
	IN	4*	3.94	12.00	6.19	7.88	10.00	7.68	18.11	143
	MM	100	100	305	157	200	254	195	460	65
	IN	6*	5.91	16.00	8.50	10.62	12.50	9.45	21.65	209
	MM	150	150	403	216	270	318	240	550	95
	IN	8	7.87	20.00	10.62	13.00	15.00	11.81	39.37	330
	MM	200	200	502	270	330	381	300	1000	150
	IN	10	9.84	22.38	12.75	15.25	17.50	13.98	39.37	550
	MM	250	250	568	324	387	445	355	1000	250

* = Lever operated

2-Piece Flanged Floating Ball Valves - Full Port
Size: 1/2” - 6”
Class: 600

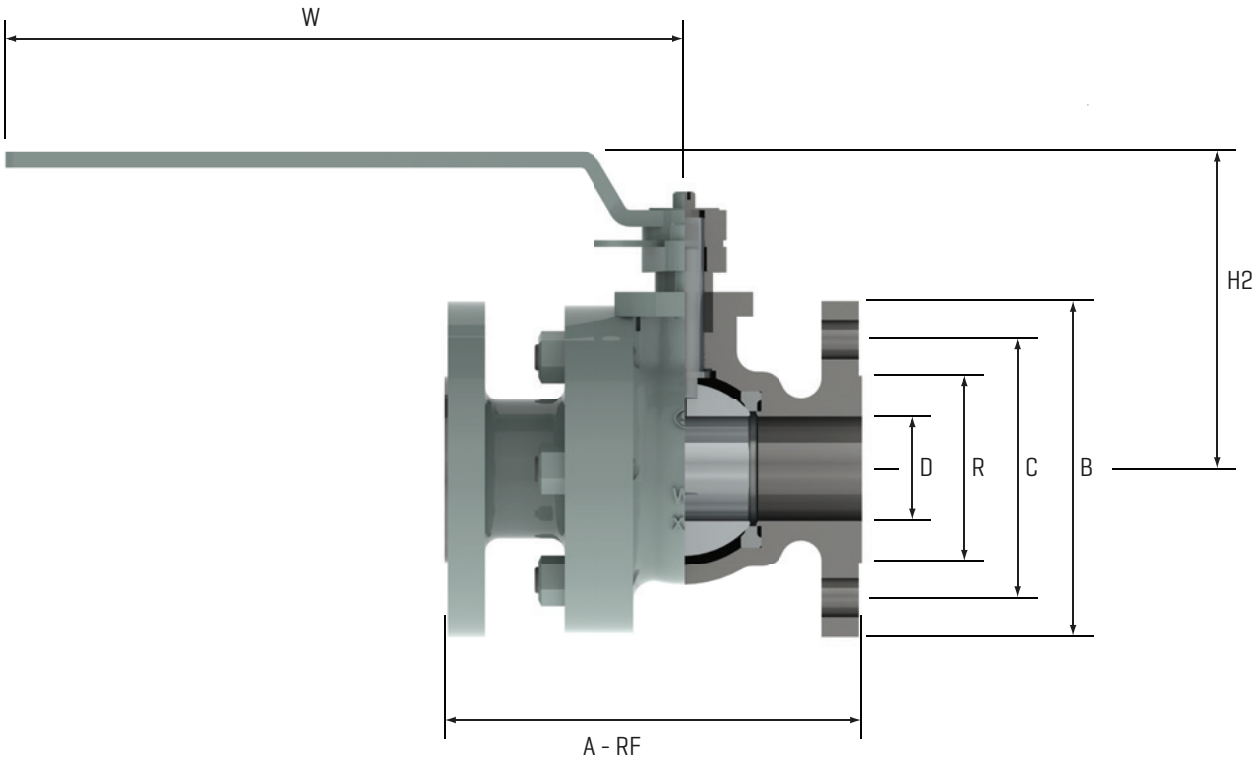

CLASS 600	Size		Bore	End - to - End	Raised Face OD	Bolt Circle Diameter	Flange OD	Center - to - Top	Lever Length	Weights LBS/KG
			D	A - RF	R	C	B	H2	W	
	IN	.5*	.51	6.5	/	2.63	3.74	3.54	4.72	12
	MM	15	13	165	/	66.7	95	90	120	5
	IN	.75*	.75	7.5	/	3.25	4.53	3.66	5.52	18
	MM	20	19	190	/	82.6	115	93	140	8
	IN	1*	1	8.5	/	3.50	4.92	3.94	6.49	25
	MM	25	25	210	/	88.9	125	100	165	11
	IN	1.5*	1.5	9.5	/	4.50	6.10	4.96	7.87	30
	MM	40	38	241	/	114.3	155	126	200	14
	IN	2*	2	11.5	3.62	5.00	6.50	5.31	9.06	40
	MM	50	51	292	92	127	165	135	230	18
	IN	3*	3	14.00	5.00	6.62	8.25	6.7	15.75	75
	MM	80	76	356	127	168	210	170	400	34
	IN	4*	4	17.00	6.19	8.5	10.75	8.1	18.11	165
	MM	100	102	432	157	200	254	206	460	75
	IN	6	6	22.00	8.50	11.5	14	13.1	21.65	221
	MM	150	152	559	216	270	318	331	550	101

* = Lever operated

2-Piece Flanged Floating Ball Valves - Full Port
Size: 1/2” - 2”
Class: 1500

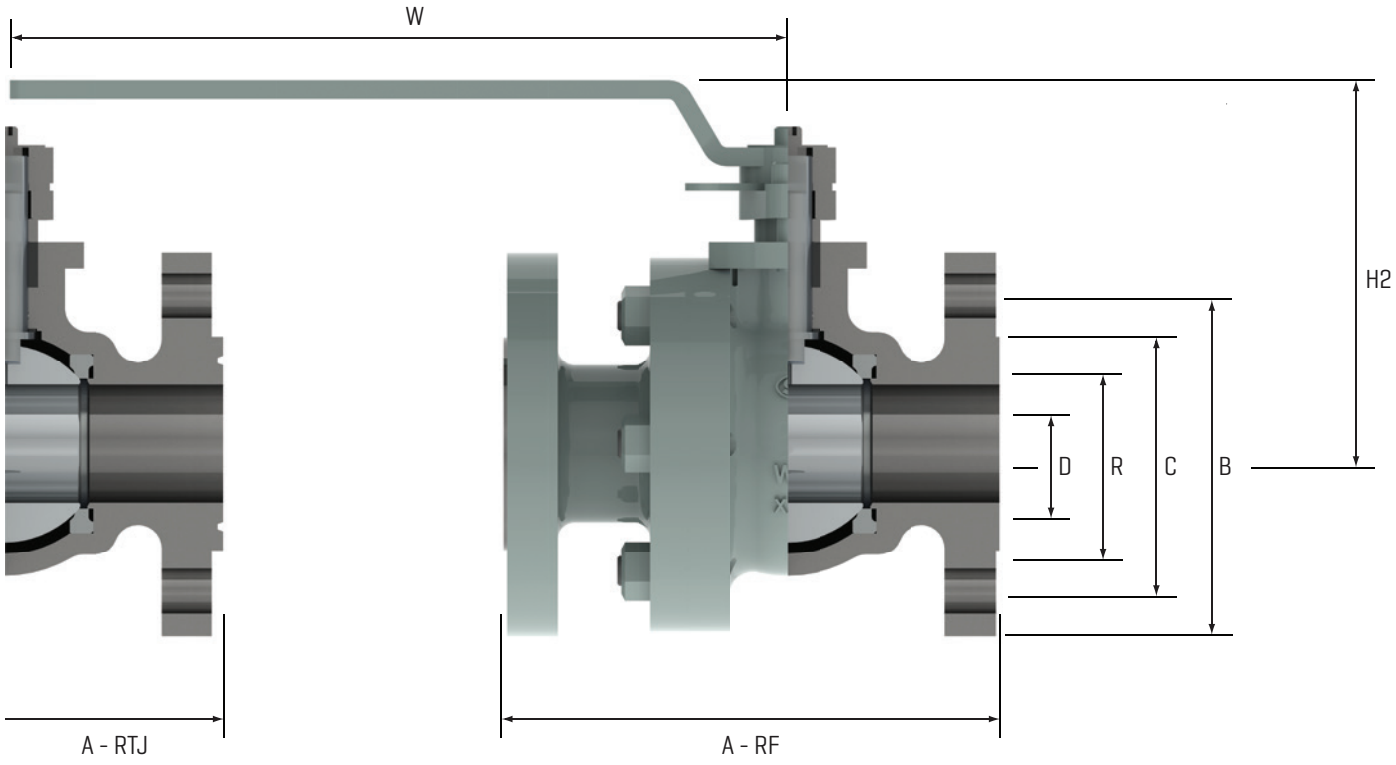

CLASS 1500	Size		Bore	End - to - End		Raised Face OD	Bolt Circle Diameter	Flange OD	Center - to - Top	Lever Length	Weights LBS/KG
			D	A - RF	A - RTJ	R	C	B	H2	W	
	IN	.5*	.51	8.5	8.6	/	3.3	4.7	3.9	9.06	14
	MM	13	13	216	219	/	83	120	99	230	6
	IN	.75*	.75	9.00	9.1	/	3.5	5.2	4	9.06	20
	MM	19	19	229	231	/	89	130	102	230	9
	IN	1*	1	10.00	10.0	/	4.1	5.9	4.5	9.06	29
	MM	25	25	254	257	/	102	150	115	230	13
	IN	1.5*	1.5	12.00	12.2	/	4.9	7.1	5.7	9.06	40
	MM	38	38	305	308	/	124	180	144	230	18
	IN	2*	1.97	14.48	14.6	3.62	5.00	6.50	6.29	9.06	48
	MM	51	50	368	371	92	127	165	160	230	22

* = Lever operated

1 & 2-Piece Flanged Floating Ball Valves Full & Reduced Port Flow Coefficients Cv Values and Opening Torques for Soft Seats

Flow Coefficients Cv Values

The Flow Coefficiency (Cv) of a valve is the rate of gallons per minute of water at 60° F through a fully opened valve at a pressure drop of 1 PSI across the valve.

Size	150		300		600		1500
	Full Port	Reduced Port	Full Port	Reduced Port	Full Port	Reduced Port	Full Port
.5	26	/	26	/	21	/	14
.75	61	/	61	/	44	/	34
1	113	/	113	/	75	/	60
1.5	270	106	270	106	239	/	180
2	470	153	470	156	405	/	305
2.5	740	276	/	/	590	/	/
3	1,250	317	1,100	361	745	/	/
4	2,250	449	2,150	533	1830	/	/
6	5,200	899	5,150	1,039	4570	/	/
8	9,550	1,180	9,450	1,402	/	/	/
10	15,050	3,277	15,050	3,277	/	/	/
12	23,050	4,350	/	/	/	/	/

Opening Torques for Soft Seats

The operating torques are in foot pounds and are calculated based on soft seats, normal temperatures, and clean media.

Size	ISO 5211	150		300		600		1500
		Full Port	Reduced Port	Full Port	Reduced Port	Full Port	Reduced Port	Full Port
.5	F03/F04	5	/	7	/	13	/	26
.75		7	/	12	/	18	/	37
1	F05/F06	12	/	18	/	30	/	74
1.5		26	26	37	37	67	/	133
2	F10	37	37	52	52	81	/	199
2.5		59	59	74	/	122	/	/
3	F10/F12	89	89	118	118	221	/	/
4		133	133	207	207	443	/	/
6		177	177	738	738	1438	/	/
8	F14	708	708	1549	1549	/	/	/
10	F16	1328	1328	2508	2508	/	/	/
12		2089	2089	/	/	/	/	/

Notes	
1	Torques may change with different mediums and trim materials.
2	All valves are at normal temperature with PTFE seats for Class 150 and 300 lbs. Nylon seats for class 600 through 1500.
3	All torques are at maximum differential. Safety factor not included.

Pressure Temperature Ratings - ASME B16.34

Note: Pressures in PSI

	Temp. F	A105	WCB	LF2	WCC	LCB	WC6	LCC	C5	C12	C12A	316	CF8M	F51	F53
150	-20 to 100	285	285	285	290	265	290	290	290	290	290	275	275	290	290
	200	260	260	260	260	255	260	260	260	260	260	235	235	260	260
	300	230	230	230	230	230	230	230	230	230	230	215	215	230	230
	400	200	200	200	200	200	200	200	200	200	200	195	195	200	200
	500	170	170	170	170	170	170	170	170	170	170	170	170	170	170
	600	140	140	140	140	140	140	140	140	140	140	140	140	140	140
	650	125	125	125	125	125	125	125	125	125	125	125	125	125	125
	700	110	110	110	110	110	110	110	110	110	110	110	110	110	110
	750	95	95	95	95	95	95	95	95	95	95	95	95	95	95
	800	80	80	80	80	80	80	80	80	80	80	80	80	/	/
	850	65	65	65	65	65	65	65	65	65	65	65	65	/	/
	900	50	50	50	50	50	50	50	50	50	50	50	50	/	/
	950	35	35	35	35	35	35	35	35	35	35	35	35	/	/
	1000	20	20	20	20	20	20	20	20	20	20	20	20	/	/
	1050	/	/	/	/	/	20	/	20	20	20	20	20	/	/
	1100	/	/	/	/	/	20	/	20	20	20	20	20	/	/
	1150	/	/	/	/	/	20	/	20	20	20	20	20	/	/
	1200	/	/	/	/	/	15	/	15	20	20	20	20	/	/
	1250	/	/	/	/	/	/	/	/	/	/	20	20	/	/
	1300	/	/	/	/	/	/	/	/	/	/	20	20	/	/
	1350	/	/	/	/	/	/	/	/	/	/	20	20	/	/
	1400	/	/	/	/	/	/	/	/	/	/	20	20	/	/
	1450	/	/	/	/	/	/	/	/	/	/	20	20	/	/
	1500	/	/	/	/	/	/	/	/	/	/	15	15	/	/
	Temp. F	A105	WCB	LF2	WCC	LCB	WC6	LCC	C5	C12	C12A	316	CF8M	F51	F53
300	-20 to 100	740	740	740	750	695	750	750	750	750	750	720	720	750	750
	200	680	680	680	750	660	750	750	750	750	750	620	620	745	745
	300	655	655	655	730	640	720	730	730	730	730	560	560	665	665
	400	635	635	635	705	615	695	705	705	705	705	515	515	615	615
	500	605	605	605	665	585	665	665	665	665	665	480	480	580	580
	600	570	570	570	605	550	605	605	605	605	605	450	450	555	555
	650	550	550	550	590	535	590	590	590	590	590	440	440	545	545
	700	530	530	530	555	510	570	555	570	570	570	435	435	540	540
	750	505	505	505	505	475	530	505	530	530	530	425	425	530	530
	800	410	410	410	410	390	510	410	510	510	510	420	420	/	/
	850	320	320	320	320	300	485	320	485	485	485	420	420	/	/
	900	230	230	230	225	200	450	225	375	450	450	415	415	/	/
	950	135	135	135	135	135	320	135	275	375	385	385	385	/	/
	1000	85	85	85	85	85	215	85	200	255	365	365	365	/	/
	1050	/	/	/	/	/	145	/	145	170	360	160	160	/	/
	1100	/	/	/	/	/	95	/	100	115	300	305	305	/	/
	1150	/	/	/	/	/	65	/	60	75	225	235	235	/	/
	1200	/	/	/	/	/	40	/	35	50	145	185	185	/	/
	1250	/	/	/	/	/	/	/	/	/	/	145	145	/	/
	1300	/	/	/	/	/	/	/	/	/	/	115	115	/	/
	1350	/	/	/	/	/	/	/	/	/	/	95	95	/	/
	1400	/	/	/	/	/	/	/	/	/	/	75	75	/	/
	1450	/	/	/	/	/	/	/	/	/	/	60	60	/	/
	1500	/	/	/	/	/	/	/	/	/	/	40	40	/	/

Pressure Temperature Ratings - ASME B16.34

Note: Pressures in PSI

	Temp. F	A105	WCB	LF2	WCC	LCB	WC6	LCC	C5	C12	C12A	316	CF8M	F51	F53
600	-20 to 100	1480	1480	1480	1500	1395	1500	1500	1500	1500	1500	1440	1440	1500	1500
	200	1360	1360	1360	1500	1320	1500	1500	1500	1500	1500	1240	1240	1490	1490
	300	1310	1310	1310	1455	1275	1445	1455	1455	1455	1455	1120	1120	1335	1335
	400	1265	1265	1265	1405	1230	1385	1405	1410	1410	1410	1025	1025	1230	1230
	500	1205	1205	1205	1330	1175	1330	1330	1330	1330	1330	995	995	1160	1160
	600	1135	1135	1135	1210	1105	1210	1210	1210	1210	1210	900	900	1115	1115
	650	1100	1100	1100	1175	1065	1175	1175	1175	1175	1175	885	885	1095	1095
	700	1060	1060	1060	1110	1025	1135	1110	1135	1135	1135	870	870	1085	1085
	750	1015	1015	1015	1015	955	1065	1015	1065	1065	1065	855	855	1065	1065
	800	825	825	825	825	780	1015	825	1015	1015	1015	845	845	/	/
	850	640	640	640	640	595	975	640	975	975	975	835	835	/	/
	900	460	460	460	445	405	900	445	745	900	900	830	830	/	/
	950	275	275	275	275	275	640	275	550	755	775	775	775	/	/
	1000	170	170	170	170	170	430	170	400	505	725	725	725	/	/
	1050	/	/	/	/	/	290	/	290	345	720	720	720	/	/
	1100	/	/	/	/	/	190	/	200	225	605	610	610	/	/
	1150	/	/	/	/	/	130	/	125	150	445	475	475	/	/
	1200	/	/	/	/	/	80	/	70	105	290	370	370	/	/
	1250	/	/	/	/	/	/	/	/	/	/	295	295	/	/
	1300	/	/	/	/	/	/	/	/	/	/	235	235	/	/
	1350	/	/	/	/	/	/	/	/	/	/	190	190	/	/
	1400	/	/	/	/	/	/	/	/	/	/	150	150	/	/
	1450	/	/	/	/	/	/	/	/	/	/	115	115	/	/
	1500	/	/	/	/	/	/	/	/	/	/	85	85	/	/
900	Temp. F	A105	WCB	LF2	WCC	LCB	WC6	LCC	C5	C12	C12A	316	CF8M	F51	F53
	-20 to 100	2220	2220	2220	2250	2090	2250	2250	2250	2250	2250	2160	2160	2250	2250
	200	2035	2035	2035	2250	1980	2250	2250	2250	2250	2250	1860	1860	2230	2230
	300	1965	1965	1965	2185	1915	2165	2185	2185	2185	2185	1680	1680	2000	2000
	400	1900	1900	1900	2110	1845	2080	2110	2115	2115	2115	1540	1540	1845	1845
	500	1810	1810	1810	1995	1760	1995	1995	1995	1995	1995	1435	1435	1740	1740
	600	1705	1705	1705	1815	1655	1815	1815	1815	1815	1815	1355	1355	1670	1670
	650	1650	1650	1650	1765	1600	1765	1765	1765	1765	1765	1325	1325	1640	1640
	700	1590	1590	1590	1665	1535	1705	1665	1705	1705	1705	1305	1305	1625	1625
	750	1520	1520	1520	1520	1430	1595	1520	1595	1595	1595	1280	1280	1595	1595
	800	1235	1235	1235	1235	1175	1525	1235	1525	1525	1525	1265	1265	/	/
	850	955	955	955	955	895	1460	955	1460	1460	1460	1255	1255	/	/
	900	690	690	690	670	605	1350	670	1120	1350	1350	1245	1245	/	/
	950	410	410	410	410	410	955	410	825	1130	1160	1160	1160	/	/
	1000	255	255	255	255	255	650	255	595	760	1090	1090	1090	/	/
	1050	/	/	/	/	/	430	/	430	515	1080	1080	1080	/	/
	1100	/	/	/	/	/	290	/	300	340	905	915	915	/	/
	1150	/	/	/	/	/	195	/	185	225	670	710	710	/	/
	1200	/	/	/	/	/	125	/	105	155	430	555	555	/	/
	1250	/	/	/	/	/	/	/	/	/	/	440	440	/	/
	1300	/	/	/	/	/	/	/	/	/	/	350	350	/	/
	1350	/	/	/	/	/	/	/	/	/	/	290	290	/	/
	1400	/	/	/	/	/	/	/	/	/	/	225	225	/	/
	1450	/	/	/	/	/	/	/	/	/	/	175	175	/	/
	1500	/	/	/	/	/	/	/	/	/	/	125	125	/	/

Pressure Temperature Ratings - ASME B16.34

Note: Pressures in PSI

	Temp. F	A105	WCB	LF2	WCC	LCB	WC6	LCC	C5	C12	C12A	316	CF8M	F51	F53
1500	-20 to 100	3705	3705	3705	3750	3480	3750	3750	3750	3750	3750	3600	3600	3750	3750
	200	3395	3395	3395	3750	3300	3750	3750	3750	3750	3750	3095	3095	3720	3720
	300	3270	3270	3270	3640	3190	3610	3640	3640	3640	3640	2795	2795	3335	3335
	400	3170	3170	3170	3520	3075	3465	3520	3530	3530	3530	2570	2570	3070	3070
	500	3015	3015	3015	3325	2930	3325	3325	3325	3325	3325	2390	2390	2905	2905
	600	2840	2840	2840	3025	2755	3025	3025	3025	3025	3025	2255	2255	2785	2785
	650	2745	2745	2745	2940	2665	2940	2940	2940	2940	2940	2210	2210	2735	2735
	700	2665	2665	2665	2775	2560	2840	2775	2840	2840	2840	2170	2170	2710	2710
	750	2535	2535	2535	2535	2385	2660	2535	2660	2660	2660	2135	2135	2660	2660
	800	2055	2055	2055	2055	1955	2540	2055	2540	2540	2540	2110	2110	/	/
	850	1595	1595	1595	1595	1490	2435	1595	2435	2435	2435	2090	2090	/	/
	900	1150	1150	1150	1115	1010	2245	1115	1870	2245	2245	2075	2075	/	/
	950	685	685	685	685	685	1591	685	1370	1885	1930	1930	1930	/	/
	1000	430	430	430	430	430	1080	430	995	1270	1820	1820	1820	/	/
	1050	/	/	/	/	/	720	/	720	855	1800	1800	1800	/	/
	1100	/	/	/	/	/	480	/	495	565	1510	1525	1525	/	/
	1150	/	/	/	/	/	325	/	310	375	1115	1185	1185	/	/
	1200	/	/	/	/	/	205	/	170	255	720	925	925	/	/
	1250	/	/	/	/	/	/	/	/	/	/	735	735	/	/
	1300	/	/	/	/	/	/	/	/	/	/	585	585	/	/
	1350	/	/	/	/	/	/	/	/	/	/	480	480	/	/
	1400	/	/	/	/	/	/	/	/	/	/	380	380	/	/
	1450	/	/	/	/	/	/	/	/	/	/	290	290	/	/
	1500	/	/	/	/	/	/	/	/	/	/	205	205	/	/
	Temp. F	A105	WCB	LF2	WCC	LCB	WC6	LCC	C5	C12	C12A	316	CF8M	F51	F53
2500	-20 to 100	6170	6170	6170	6250	5805	6250	6250	6250	3250	6250	6000	6000	6250	6250
	200	5655	5655	5655	6250	5505	6250	6250	6250	6250	6250	5160	5160	6200	6200
	300	5450	5450	5450	6070	5315	6015	6070	6070	6070	6070	4660	4660	5560	5560
	400	5280	5280	5280	5865	5125	5775	5865	5880	5880	5880	4280	4280	5120	5120
	500	5025	5025	5025	5540	4885	5540	5540	5540	5540	5540	3980	3980	4840	4840
	600	4730	4730	4730	5040	4595	5040	5040	5040	5040	5040	3760	3760	4640	4640
	650	4575	4575	4575	4905	4440	4905	4905	4905	4905	4905	3680	3680	4560	4560
	700	4425	4425	4425	4630	4270	4730	4630	4730	4730	4730	3620	3620	4520	4520
	750	4230	4230	4230	4230	3970	4430	4230	4430	4430	4430	3560	3560	4430	4430
	800	3430	3430	3430	3430	3255	4230	3430	4230	4230	4230	3520	3520	/	/
	850	2655	2655	2655	2655	2485	4060	2655	4060	4060	4060	3480	3480	/	/
	900	1915	1915	1915	1855	1685	3745	1855	3115	3745	3745	3460	3460	/	/
	950	1145	1145	1145	1145	1145	3655	1145	2285	3145	3220	3220	3220	/	/
	1000	715	715	715	715	715	1800	715	1655	2115	3030	3030	3030	/	/
	1050	/	/	/	/	/	1200	/	1200	1430	3000	3000	3000	/	/
	1100	/	/	/	/	/	800	/	830	945	2515	2545	2545	/	/
	1150	/	/	/	/	/	545	/	515	630	1855	1970	1970	/	/
	1200	/	/	/	/	/	345	/	285	770	1200	1545	1545	/	/
	1250	/	/	/	/	/	/	/	/	/	/	1230	1230	/	/
	1300	/	/	/	/	/	/	/	/	/	/	970	970	/	/
	1350	/	/	/	/	/	/	/	/	/	/	800	800	/	/
	1400	/	/	/	/	/	/	/	/	/	/	630	630	/	/
	1450	/	/	/	/	/	/	/	/	/	/	485	485	/	/
	1500	/	/	/	/	/	/	/	/	/	/	345	345	/	/

Flange Dimensions - ANSI B16.5 & B16.47

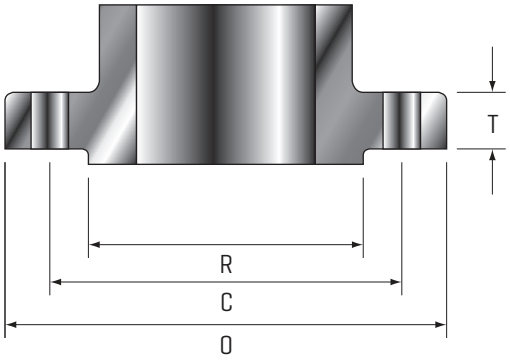

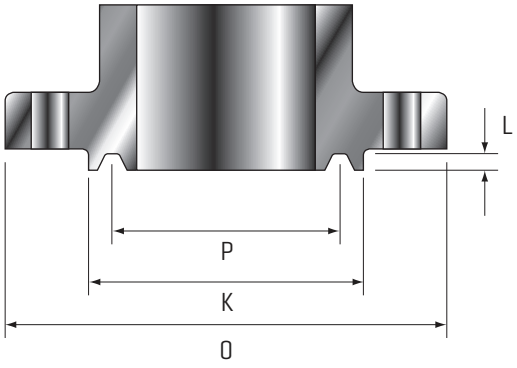

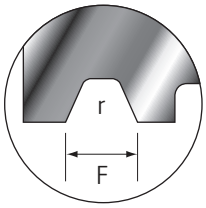

Groove Detail

Class	Size	Flg. Dia.	Flg. Thick.	Raised Face Dia.	Drilling			Face Dia.	Ring Joint				
					Bolt CIrcle Dia.	# of Bolts	Hole Dia.		Pitch Dia.	Grv. Depth	Grv. Width	Btm. Radius	Ring No.
		O	T	R	C			K	P	L	F	r	
150	2	6.00	0.75	3.62	4.75	4	0.75	4.00	3.250	0.250	0.344	0.03	R22
	2.5	7.00	0.88	4.12	5.50	4	0.75	4.75	4.000	0.250	0.344	0.03	R25
	3	7.50	0.94	5.00	6.00	4	0.75	5.25	4.500	0.250	0.344	0.03	R29
	4	9.00	0.94	6.19	7.50	8	0.75	6.75	5.875	0.250	0.344	0.03	R36
	6	11.00	1.00	8.50	9.50	8	0.88	8.62	7.625	0.250	0.344	0.03	R43
	8	13.50	1.12	10.62	11.75	8	0.88	10.75	9.750	0.250	0.344	0.03	R48
	10	16.00	1.19	12.75	14.25	12	1.00	13.00	12.000	0.250	0.344	0.03	R52
	12	19.00	1.25	15.00	17.00	12	1.00	16.00	15.000	0.250	0.344	0.03	R56
	14	21.00	1.38	16.25	18.75	12	1.12	16.75	15.625	0.250	0.344	0.03	R59
	16	23.50	1.44	18.50	21.25	16	1.12	19.00	17.875	0.250	0.344	0.03	R64
	18	25.00	1.56	21.00	22.75	16	1.25	21.50	20.375	0.250	0.344	0.03	R68
	20	27.50	1.69	23.00	25.00	20	1.25	23.50	22.000	0.250	0.344	0.03	R72
	22	29.50	1.81	25.25	27.25	20	1.38	/	/	/	/	/	/
	24	32.00	1.88	27.25	29.50	20	1.38	28.00	26.500	0.250	0.344	0.03	R76
	26	34.25	2.69	29.50	31.75	24	1.38	/	29.500	0.500	0.781	0.060	R93
	28	36.50	2.81	31.50	34.00	28	1.38	/	31.500	0.500	0.781	0.060	R94
	30	38.75	2.94	33.75	36.00	28	1.38	/	33.750	0.500	0.781	0.060	R95
	32	41.75	3.19	36.00	38.50	28	1.62	/	36.000	0.562	0.906	0.060	R96
	34	43.75	3.25	38.00	40.50	32	1.62	/	38.000	0.562	0.906	0.060	R97
	36	46.00	3.56	40.25	42.75	32	1.62	/	40.250	0.562	0.906	0.060	R98
300	2	6.50	0.88	3.62	5.00	8	0.75	4.25	3.250	0.312	0.469	0.03	R23
	2.5	7.50	1.00	4.12	5.88	8	0.88	5.00	4.000	0.312	0.469	0.03	R26
	3	8.25	1.12	5.00	6.62	8	0.88	5.75	4.875	0.312	0.469	0.03	R31
	4	10.00	1.25	6.19	7.88	8	0.88	6.88	5.875	0.312	0.469	0.03	R37
	6	12.50	1.44	8.50	10.62	12	0.88	9.50	8.312	0.312	0.469	0.03	R45
	8	15.00	1.62	10.62	13.00	12	1.00	11.88	10.625	0.312	0.469	0.03	R49
	10	17.50	1.88	12.75	15.25	16	1.12	14.00	12.750	0.312	0.469	0.03	R53
	12	20.50	2.00	15.00	17.75	16	1.25	16.25	15.000	0.312	0.469	0.03	R57
	14	23.00	2.12	16.25	20.25	20	1.25	18.00	16.500	0.312	0.469	0.03	R61
	16	25.50	2.25	18.50	22.50	20	1.38	20.00	18.500	0.312	0.469	0.03	R65
	18	28.00	2.38	21.00	24.75	24	1.38	22.62	21.000	0.312	0.469	0.03	R69
	20	30.50	2.50	23.00	27.00	24	1.38	25.00	23.000	0.375	0.531	0.06	R73
	22	33.00	2.62	25.25	29.25	24	1.62	27.00	25.000	0.438	0.594	0.06	R81
	24	36.00	2.75	27.25	32.00	24	1.62	29.50	27.250	0.438	0.656	0.06	R77
	26	38.25	3.31	29.50	34.50	28	1.75	31.88	29.500	0.500	0.781	0.06	R93
	28	40.75	3.56	31.50	37.00	28	1.75	33.88	31.500	0.500	0.781	0.06	R94
	30	43.00	3.75	33.75	39.25	28	1.88	36.12	33.750	0.500	0.781	0.06	R95
	32	45.25	3.94	36.00	41.50	28	2.00	38.75	36.000	0.562	0.906	0.06	R96
	34	47.50	4.12	38.00	43.50	28	2.00	40.75	38.000	0.562	0.906	0.06	R97
	36	50.00	4.38	40.25	46.00	32	2.12	43.00	40.250	0.562	0.906	0.06	R98

Flange Dimensions - ANSI B16.5 & B16.47

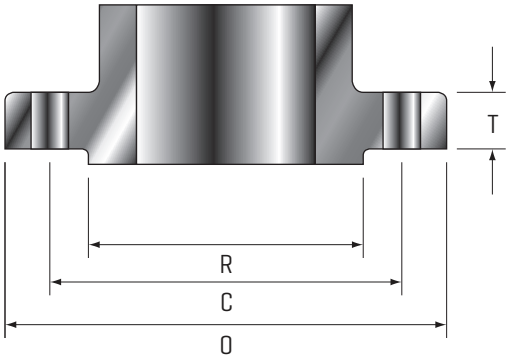

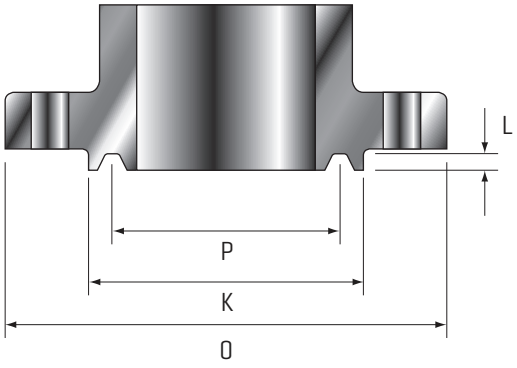

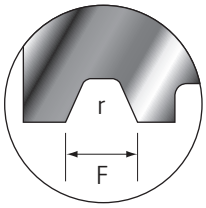

Groove Detail

Class	Size	Flg. Dia.	Flg. Thick.	Raised Face Dia.	Drilling			Face Dia.	Ring Joint				
					Bolt CIrcle Dia.	# of Bolts	Hole Dia.		Pitch Dia.	Grv. Depth	Grv. Width	Btm. Radius	Ring No.
		O	T	R	C			K	P	L	F	r	
600	2	6.50	1.00	3.62	5.00	8	0.75	4.25	3.250	0.312	0.469	0.03	R23
	2.5	7.50	1.12	4.12	5.88	8	0.88	5.00	4.000	0.312	0.469	0.03	R26
	3	8.25	1.25	5.00	6.62	8	0.88	5.75	4.875	0.312	0.469	0.03	R31
	4	10.75	1.50	6.19	8.50	8	1.00	6.88	5.875	0.312	0.469	0.03	R37
	6	14.00	1.88	8.50	11.50	12	1.12	9.50	8.312	0.312	0.469	0.03	R45
	8	16.50	2.19	10.62	13.75	12	1.25	11.88	10.625	0.312	0.469	0.03	R49
	10	20.00	2.50	12.75	17.00	16	1.38	14.00	12.750	0.312	0.469	0.03	R53
	12	22.00	2.62	15.00	19.25	20	1.38	16.25	15.000	0.312	0.469	0.03	R57
	14	23.75	2.75	16.25	20.75	20	1.5	18.00	16.500	0.312	0.469	0.03	R61
	16	27.00	3.00	18.50	23.75	20	1.62	20.00	18.500	0.312	0.469	0.03	R65
	18	29.25	3.25	21.00	25.75	20	1.75	22.62	21.000	0.312	0.469	0.03	R69
	20	32.00	3.50	23.00	28.50	24	1.75	25.00	23.000	0.375	0.531	0.06	R73
	22	34.25	3.75	25.25	30.62	24	1.88	27.00	25.000	0.438	0.594	0.06	R81
	24	37.00	4.00	27.25	33.00	24	2.00	29.50	27.250	0.438	0.659	0.06	R77
900	2	8.5	1.5	3.62	6.5	8	1	4.88	3.75	0.312	0.469	0.03	R24
	2.5	9.62	1.62	4.12	7.50	8	1.12	5.39	4.250	0.312	0.469	0.03	R27
	3	9.50	1.50	5.00	7.50	8	1.00	6.12	4.875	0.312	0.469	0.03	R31
	4	11.50	1.75	6.19	9.25	8	1.25	7.12	5.875	0.312	0.469	0.03	R37
	6	15.50	2.19	8.50	12.50	12	1.25	9.50	8.312	0.312	0.469	0.03	R45
	8	18.50	2.50	10.62	15.50	12	1.50	12.12	10.625	0.312	0.469	0.03	R49
	10	21.50	2.75	12.75	18.50	16	1.50	14.25	12.750	0.312	0.469	0.03	R53
	12	24.00	3.12	15.00	21.00	20	1.50	16.50	15.000	0.312	0.469	0.03	R57
	14	25.25	3.38	16.25	22.00	20	1.62	18.38	16.500	0.438	0.656	0.06	R62
	16	27.75	3.50	18.50	24.25	20	1.75	20.62	18.500	0.438	0.656	0.06	R66
	18	31.00	4.00	21.00	27.00	20	2.00	23.38	21.00	0.500	0.781	0.06	R70
	20	33.75	4.25	23.00	29.50	20	2.12	25.50	23.000	0.500	0.781	0.06	R74
	24	41.00	5.50	27.25	35.50	20	2.62	30.38	27.250	0.625	1.062	0.09	R78
1500	2	8.50	1.50	3.62	6.50	8	1.00	4.88	3.750	0.312	0.469	0.03	R24
	2.5	9.62	1.62	4.12	7.50	8	1.12	5.38	4.250	0.312	0.469	0.03	R27
	3	10.50	1.88	5.00	8.00	8	1.25	6.62	5.375	0.312	0.469	0.03	R35
	4	12.25	2.12	6.19	9.50	8	1.38	7.62	6.375	0.312	0.469	0.03	R39
	6	15.50	3.25	8.50	12.50	12	1.50	9.75	8.312	0.375	0.531	0.06	R46
	8	19.00	3.62	10.62	15.50	12	1.75	12.50	10.625	0.438	0.656	0.06	R50
	10	23.00	4.25	12.75	19.00	12	2.00	14.62	12.750	0.438	0.656	0.06	R54
	12	26.00	4.88	15.00	22.50	16	2.12	17.25	15.000	0.562	0.906	0.06	R58
	14	29.50	5.25	16.25	25.00	16	2.38	19.25	16.500	0.625	1.062	0.09	R63
	16	32.50	5.75	18.50	27.75	16	2.62	21.50	18.500	0.688	1.188	0.09	R67
	18	36.00	6.38	21.00	30.50	16	2.88	24.12	21.000	0.688	1.188	0.09	R71
	20	38.75	7.00	23.00	32.75	16	3.12	26.50	23.000	0.688	1.312	0.09	R75
	24	46.00	8.00	27.25	39.00	16	3.62	31.25	27.250	0.812	1.438	0.09	R79
2500	2	9.25	2.00	3.62	6.75	8	1.00	4.48	4.000	0.312	0.469	0.030	R26
	2.5	10.50	2.25	4.12	7.75	8	1.13	5.86	4.375	0.375	0.531	0.060	R28
	3	12.00	2.62	5.00	9.00	8	1.25	6.61	5.000	0.375	0.531	0.060	R32
	4	14.00	3.00	6.19	10.75	8	1.50	7.99	6.188	0.438	0.656	0.060	R38
	5	16.50	3.62	7.31	12.75	8	1.75	9.48	7.500	0.500	0.781	0.060	R40
	6	19.00	4.25	8.50	14.50	8	2.00	10.98	9.000	0.500	0.781	0.060	R47
	8	21.75	5.00	10.62	17.25	12	2.00	13.38	11.000	0.562	0.906	0.060	R51
	10	26.50	6.50	12.75	21.75	12	2.50	16.73	13.500	0.688	1.188	0.090	R55
	12	30.00	7.25	15.00	24.38	12	2.75	19.48	16.000	0.688	1.312	0.090	R60

Terms & Conditions

Quotation Validity

This quotation is valid for 30 days from the date quotation is sent. Validity on special metals, including Stainless Steel, is 14 days from the date the quotation is sent. All products offered from stock are subject to prior sale.

Shipments

All items quoted are EXW our Dock - (Ex Works - SCV Valve Facility Sante Fe, Texas 77510) - unless otherwise noted and agreed to in writing. Shipment may be billed either third party billing to the buyer or freight collect. Shipment dates offered above are forecasted delivery lead times and are estimated from the date payment terms (acceptable to seller) are established, clarification is received on all technical information, and resolution of customer's written approval of drawings is received (when required). The equipment quoted shall be packed in accordance with seller's standard packing procedure unless otherwise noted and agreed to in writing by the seller.

Force Majeure

If in the case of an act of God, war, riot, fire, explosion, flood, or any other circumstances of whatsoever nature which are beyond the control of the seller and which in any way affect the ability of the seller to fulfill its delivery obligations, the delivery is hindered, impeded, or delayed the seller shall be exonerated from all responsibilities and reserves the right to postpone the delivery beyond the original schedule.

Payment terms

All terms are to be negotiated. Credit cards accepted (Master Card, Visa, American Express).

Purchase Orders

All buyer's purchase orders supplied to the seller are to be written in the English language.

Prices

All prices quoted are in USD as per the preceding pricing schedule. The minimum order value is $5,000.00 (five thousand dollars), unless otherwise agreed to by seller. If for some reason any items are changed or additions to the order required, seller reserves the right to adjust prices accordingly. All sales are subject to approval of seller's credit department. If buyer fails to meet the agreed upon and established commercial terms of the contract, the seller may with-hold all subsequent deliveries until such time that the original commercial terms of the contract have been met by the buyer (or subsequent commercial terms have been agreed upon by the seller with the buyer).

Intellectual Property

All specifications, illustrations, drawings, certificates, and other particulars supplied by seller remain the intellectual property of the seller and should not be disclosed to any third party without the prior written consent of seller.

Governing Law; Arbitration; Jurisdiction

The terms and conditions of this quotation and any subsequent purchase order shall be construed, interpreted, and performed exclusively according to the laws of the State of Texas, USA. The courts of such state shall have exclusive jurisdiction out of all controversies arising out of or in connection with this agreement. The parties consent that process may be served upon them in any such action by registered mail at the address stated for Buyer on its purchase order, and upon SCV Valve at the address noted above in Santa Fe, Texas, or personally within or without the State of Texas. Any legal action with respect to any agreement must be commenced within one year after the cause of action has accrued. The provisions of the Uniform Commercial Code as adopted by the State of Texas, and not under the United Nations Convention on Contracts for the International Sale of Goods, shall apply.

Warranty

All seller's products are guaranteed against defects in workmanship for a period of twelve (12) months after being placed in service, but not exceeding eighteen (18) months after shipment, when products are properly installed per seller specifications and used within the service and pressure range for which they were manufactured. Full risk of loss shall pass to the buyer upon delivery at FOB point, or destination port in case of CIF. This guarantee is limited to the replacement of any valve parts/components found to be defective either in material or workmanship. This guarantee does not extend to costs of labor, freight, or any other consequential charges. The unauthorized use of third party components and workmanship in seller's products voids this warranty.

Limitation of Liability

The liability of the seller under this agreement or with respect to any products supplied or services performed pursuant to this agreement, whether in contract, in tort, in strict liability or otherwise, shall not exceed the purchase price paid by the buyer with respect thereto. In no event will the seller be liable in contract, in tort, in strict liability or otherwise for any special, indirect, incidental, or consequential damages. This is including but not limited to loss of anticipated profits or revenues, loss of use, non-operation or increased expense of operation of equipment, cost of capital, or claims from customer or buyer for failure or delay in achieving anticipated profits or products.

Cancellation

No contract may be canceled by the buyer except upon written notice to seller and upon payment to seller of all costs incurred by the contract arising out of, or in connection with, the contract. Export of goods covered hereby is subject to United States Customs Control. Standard stocking items will be subject to a twenty-five percent (25%) restocking and/or cancellation charge. Non-standard stocking items will be subject to a one-hundred percent (100%) restocking and/or cancellation charge.

Cancellation Charge

The following indicates the rates of cancellation charge of contract value for project manufactured items and/or special engineered items at various stages of production:

- **Time of cancellation: Order Acknowledgement and prior to Engineering engagement.** **Cancellation Charge: 10%**
- **Time of cancellation: After start of engineering but prior to release to production.** **Cancellation Charge: 30%**
- **Time of cancellation: After release to production but prior to completion of fabrication.** **Cancellation Charge: 80%**
- **Time of cancellation: After completion of fabrication.** **Cancellation Charge: 100%**

Return of Goods

No product shall be returned to seller without written authorization and shipping instructions having been obtained from seller. Products authorized for returns are to be shipped freight pre-paid to the SCV Valve Facility identified in writing, unless otherwise notified, and are subject to seller's standard re-stocking fees.

Documentation

MTR's are available at no charge upon request. The seller's standard document package is per ISO 10474 3.1B requirements. Additional requested documentation is subject to charge.

Inspection

The customer or his authorized representative may, with four (4) weeks prior notice given to seller, visually inspect products manufactured by seller. Such seller approved inspections will be carried out in accordance with seller's standard or seller approved customer inspection procedures. If any inspection or documentation requested by the customer is over and beyond the scope and criteria initially agreed to by the seller, any costs incurred by conducting such inspection or preparation of special documents shall be paid by the buyer prior to release of the items for shipment.

Witness Hydro-testing

Witness hydro-testing is available at a cost. A scope of buyers inspection request is to be provided to seller at order placement. Late notice of such requested inspection is subject to additional costs. The cost associated with such witness hydro request is to be agreed on prior to any such testing taking place. Payment of this type of testing to be negotiated. Additionally, any costs associated with a third party inspector will not be at the sellers expense.

The SCV valve brand was established in 1972 as a maintenance and modification company with the ability to provide full in-line valve service and repair. In the mid-1970's, after experiencing many shortcomings of other valve products in the industry, the first SCV valve was manufactured. Since that time, the SCV brand has been expanded its manufactured products to cover a broad range of valves. Industries served include the power, paper and pulp, oil and gas, and petro-chemical sectors.

SCV Valve takes sincere pride in our ability to manufacture both commodity and specialty valves that meet and exceed the needs of our customers. All sizes, pressure classes, and metallurgical compositions are managed in house utilizing the strictest quality control measures to ensure the customer's total satisfaction.

SCV Valve products include thru conduit gates, trunnion mounted balls, floating balls, wedge gates, full port swing checks, piston checks, and lubricated plugs. Valves utilized throughout the industry must meet rigorous quality and production standards.
SCV Valve has earned its API 6A, API 6D, ISO: 9001, CE-PED, and CRN certifications while operating under the API Q1 Quality Management System.

With years of dedication and commitment to quality, design, and service, SCV Valve has grown to be one of the premier valve manufacturers in the industry with the largest inventory of high pressure ball, gate, and check valves. We pride ourselves on our high quality products, timely delivery capabilities, and competitive prices.

On behalf of all of the members at SCV Valve, we thank you for the opportunity to earn your business.

Sincerely,

Sid McCarra
President
SCV Valve, LLC

Since 1972, the SCV brand has been committed to providing quality flow control products to the Power, Paper & Pulp, Oil & Gas, and Petro Chemical industries.

As one of the largest valve manufacturers, SCV Valve's reputation is unparalleled for producing high quality commodity and specialty valves. Products range in sizes 1/2" - 48", in pressure classes from 150# - 2500# and are backed by timely deliveries and competitive prices.

Call SCV today at (281)482-4728 for all your valve needs or visit us on the web @ www.scvvalve.com.

SALES, PROJECTS, ENGINEERING, MANUFACTURING, & WAREHOUSING
3521 FM 646 Rd. North
Santa Fe, TX 77510
Phone: (281) 482-4728
Fax: (281) 482-9728
Hours: 8:00 a.m. to 5:00 p.m. Central Standard
Email: sales@scvvalve.com

SCV VALVE

(281) 482-4728 · www.scvvalve.com

Rev: SCVFBV - 092520